foxpool™

PRODUCT CATALOG

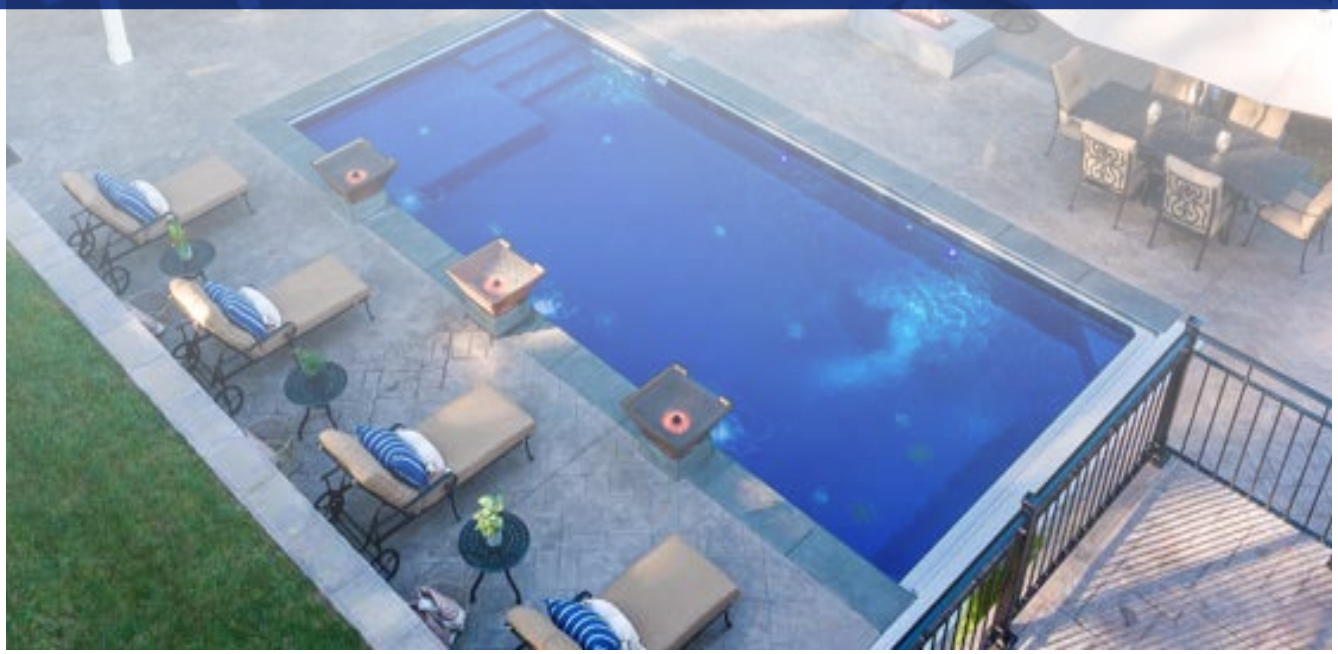

THE STRONGEST NAME IN POOLS

Since its inception, The Fox Pool brand has been dedicated to creating a trusted reputation within the industry by producing only the best in high-quality swimming pool and spa products, and providing top-notch Customer Service to match. Our products are manufactured in our over 360,000 sq. ft. facility in Schuylkill Haven, PA, and also distributed from Ontario, Canada. Our Dealer network of pool professionals throughout North America continues to expand its reach, allowing more communities to build their dream pools.

Backyard paradise dreams are only limited by the imagination. Fox Pool can create custom pools to suit the needs of any landscape and lifestyle. We understand an inground pool is a serious investment, and that's why we take pride in our processes and stand behind our products as being safe, trusted, and durable to guarantee longevity that maintains luxury throughout the lifetime of owning your home.

Structurally sound pools begin with dependable foundations.
Our steel panels and construction systems are some of the finest in the industry, and ensure strength that stands against the test of time. With a reliable foundation underway, the real fun begins with customizable options that truly make each pool a unique experience. Explore our steel or thermoplastic step offerings, coping options, autocover capabilities, upgrade with a luxury spa, and more, Whether you're looking for the ideal staycation spot to host family and friends, a backyard escape to enjoy the long summer days, or a functional space to maximize exercise and fun, a Fox pool is guaranteed to provide the experience you're looking for.

A brand within Fox Pool, Quaker Plastics provides a wide range of products to the swimming pool and construction industries: pool steps, deck and paver drains, liner locks and control joints help to provide a complete offering for backyards and patios.

Our trusted reputation to provide engineering solutions is backed by a proven and high-quality product line produced with our state-of-the-art manufacturing processes.

In partnership with Fox, Modern Moulding offers unique and innovative cantilever coping styrofoam forms that are easy to install and replace, and provide a visually impressive profile on any pool.

STANDARD SHAPES

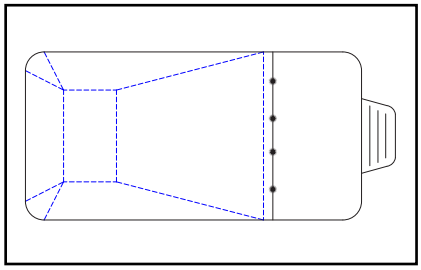

RECTANGLE
2' cut corners

1632 1836
1634 2040

RECTANGLE
2' radius corners

1632 1836
1634 2040

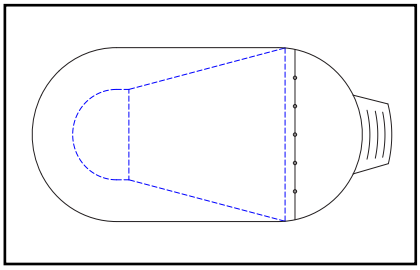

OVAL

1733
1838
2040

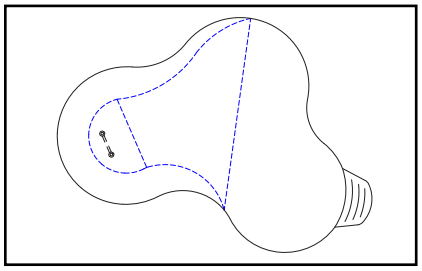

LAKEFRONT

2034
2236
2740

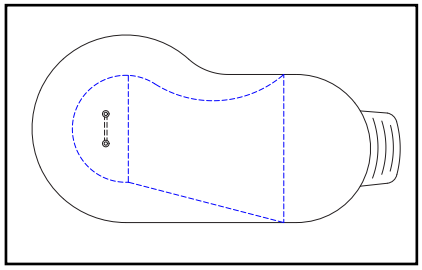

KIDNEY
standard and reverse

1527 2237
1729 2542
1934

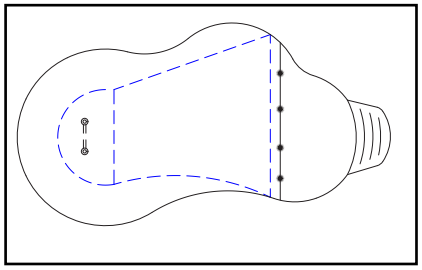

LAGOON
left and right

1829 2240
2034 2740
2236

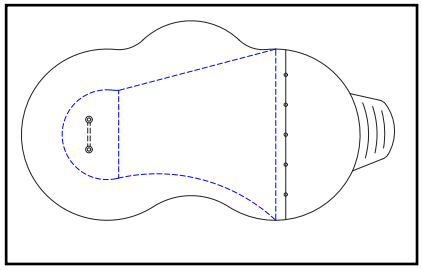

BAYSIDE
left and right

2034
2236
2740

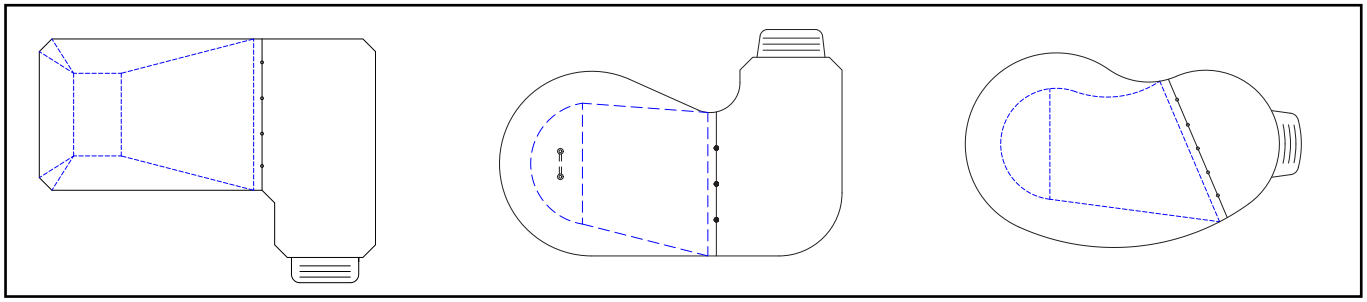

CONTEMPORARY

2640 90L - *left and right* | 2340 Niagara - *left and right* | 2236 Crescent - *left and right*

AUTO-COVER

RECTANGLE
with plastic corner stair

1224 1634
1430 1836
1632 2040

RECTANGLE
with 6' Sundeck and full-width poured stair

1224 1634
1430 1836
1632 2040

RECTANGLE
with full-width poured stair

1224 1634
1430 1836
1632 2040

INDEX

STEEL

About 6-7
Panels (Universal & Boxwall) 8-9
Steel Step Options 10-11
Cleargard® 12-13
X-Brace™ Construction System 14-15
Accessories (Turnbuckles) 16
Accessories (Bolt Packs) 17

THE BACKYARD POOLSCAPE SERIES: A PLUNGE POOL COLLECTION

About 18
Collection Details 19

THE ULTIMATE POOL

About 20-21
Shapes & Sizes 22
Installation Options 23
Ultimate Pool Kits 24-25

QUAKER PLASTICS

About 26-27
Color Guide 28
Deck Drain: 4" Waterhog 29
Deck Drain: 3" Waterhog 30
Deck Drain: 2" Removable Top 31
Deck Drain: Square Drain 32
Deck Drain: Deck Drain-A-Way System II 33
Deck Drain: 2" Paver 34
Deck Drain: Streamline 35
Concrete Products 36-37
Discharge Hose & Liner Locks 38
Liner Tracks 39
Liner Hangers 40-41

FOX COPING & LINER TRACK

About 42-43
Foxite II & Cantilever Coping 44-45
Coping Options (Bullnose) 46-47
Top Mount Liner Track 48
Side Mount Liner Track 49
Cap Lock/Double Track 50
Specialty Profiles 51-53
Accessories 54
Resources 55

THERMOPLASTIC STEPS

About 56-57
Quaker Steps (White Models) 58-59
Quaker Steps (Gray Models) 60-61
Parts Kit 62
Universal Faceplate 63
'Goodie' Bag 64-65

LUXURY SPAS

About 66
Luxury Spa Models 68
Spa Features 69

MODERN MOULDING

About 70-71
Coping Profiles - Vinyl Pools 72
Coping Profiles - Fiberglass Pools 73
Coping Profiles - Concrete/Gunite Pools 74
Coping Profiles for Coverstar Auto-Covers 75
Coping Profiles for Automatic Covers 76
Coping Profiles for APC Auto-Covers 77
Clips & Accessories 79

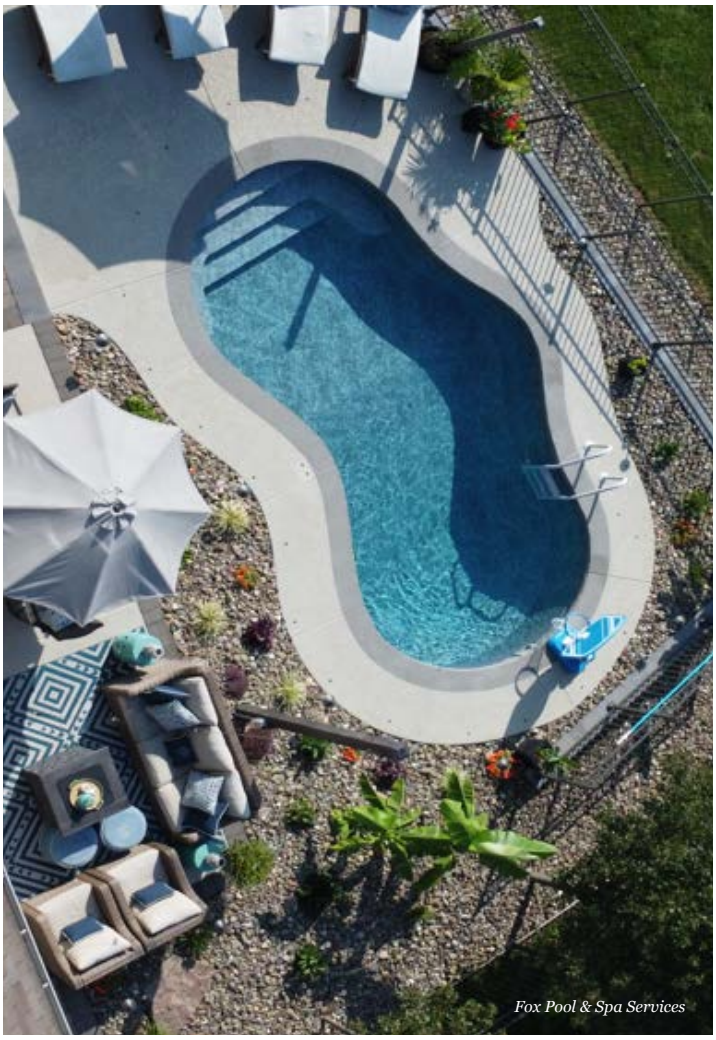

Fox Pool & Spa Services

Cam-Mac Pools & Installations

Aqua Pools

Caldwell Pools

Aquarius Pool & Patio

Turner' Pool & Spa

Central Pool and Spa

Pools by Baxter

STEEL

At the heart of our business are steel walls, steps and entryways, construction systems, and accessories to create an attractive and durable foundation for a dream pool. Customization is key, and we are happy to work with you to achieve the look and functionality desired.

Technology plays an important role in manufacturing pool panels and components. We invest in innovative technology — the kind that enables us to engineer, bend, shape, and build the kind of pool systems that surprise and satisfy Homeowners. Our steel offerings provide strength and reliability where it counts.

STRENGTH WHERE IT COUNTS

PANELS

STEPS & ENTRYWAYS

CLEARGARD™

X-BRACE

ACCESSORIES

BOXWALL PANELS

- **NEW Cleargard™ non-corrosive steel protection (see pg. 12)**
- NOW 42" TALL
- Available in 8', 6', 4', 3', 2', and 1' panels
- The best option for pools with straight walls/Rectangle pool builds

BOXWALL PANEL PART #'s	DESCRIPTION
ZS42800XXX3F	ZAM 8' PLAIN W/3 Z
ZS42800SCN2F	ZAM 8' CENTER SKIMMER W/2 Z
ZS42800RFR3F	ZAM 8' RIGHT RETURN W/3 Z
ZS42800LCN2F	ZAM 2' CENTER LIGHT W/2 Z
ZS42600XXX1F	ZAM 6' PLAIN PANEL W/ 1 Z
ZS42400XXX0F	ZAM 4' PLAIN PANEL
ZS42300XXX0F	ZAM 3' PLAIN PANEL
ZS42200XXX0F	ZAM 2' PLAIN
ZS42100XXX0F	ZAM 1' PLAIN
ZC42315XX02000F	ZAM 2' RADIUS PANEL
CS902SA	Square Corner Angle
CS-902SB	Big Vee Angle
Z1-4236BOXX	X-BRACE BXWLL 36" DECK/42" WALL
Z1-AUTOBOXSUP	PANEL SUPPORT AUTOCOVER BOX
F1-463 24"	X-BRACE FOR AUTOCOVER BOX

Please contact Customer Service for quotes for 48" Boxwall Panels

UNIVERSAL PANELS

- ClearGard coated 14-gauge galvanized steel
- 42" high options
- Available in 4', 3', 2', and 1' panels
- Serrated bottom flange allows for flexibility when building free form shapes
- Stiffeners attached remove a construction step for builders

UNIVERSAL PANELS - 42" (with bottom flange) PART #'s	DESCRIPTION
ZU42800XXX3	8' UNIVERSAL PANEL W/3 Z
ZU42800SRT3	8' UNIVERSAL RIGHT SKIM W/3 Z
ZU42800RLT3	8' UNIVERSAL LEFT RTN W/3Z
ZU42800LCN2	8' UNIVERSAL CNT LIGHT W/2 Z
ZU42600XXX2	6' UNIVERSAL W/2 Z
ZU42400XXX1	4' UNIVERSAL W/1Z
ZU42300XXX1	3' UNIVERSAL W/1 Z
ZU42200XXX0	2' UNIVERSAL PANEL
ZU42200LCN0	2' UNIVERSAL CNT LIGHT
ZU42100XXX0	1' UNIVERSAL PANEL

CORNER PANELS - 42" (no bottom flange) PART #'s	DESCRIPTION
Z42-1202R	2' TRU RADIUS UNIV CRN-42"
Z42-416	2' UNIVERSAL CORNER
Z42-417	2' UNIVERSAL CORNER W/RETURN
Z42-414	2' UNIVERSAL CORNER W/SKIM
Z42-455	2' UNIVERSAL INSIDE CORNER
Z42-856	1' UNIVERSAL CORNER 8" DIAG
Z42-600	90-degree corner
Z42-1512LL	Inside corner filler 42" high

Please contact Customer Service for quotes for 48" universal Panels.

STEEL STEPS & ENTRYWAYS

Fox Pool's steel steps, benches, and entryways create an attractive and durable foundation for any dream pool.

Fox Pool stands ready with the most advanced manufacturing technology, design software,and handcrafted precision to ensure an accurately finished product, every time. All items are manufactured with 14-gauge steel or Cleargard® corrosion-resistant steel, and include aluminum liner track for easy liner installation. Every new model is thoughtfully designed to ensure a “perfect-fit” when installed on-site, every time. Fox offers solid, open-pour, the modular step system, drop-in step options for any pool design.

Quite simply, Fox steel steps and benches are unmatched for performance, function, and elegance.

SOLID

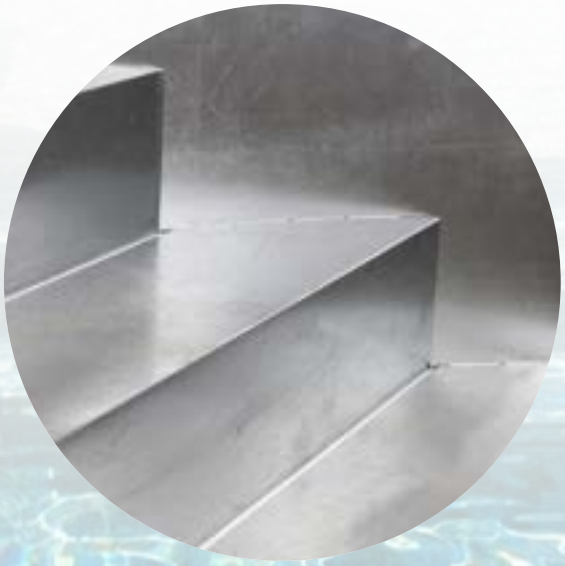

SOLID STEPS

Tried and true, our solid steel steps available in any 42” height, and boast durability. Custom entry steps, benches, lounges, and sundecks are our specialty, and can be manufactured to fulfill almost any design.

OPEN-POUR

OPEN-POUR STEPS

Trusted by Dealers and families across North America, Fox open-pour steps are a popular and affordable steel entry option for new builds and renovation projects, Every step, bench, or sundeck created by Fox is available as Open Pour, with step-by-step instructions for simple assembly on-site.

MODULAR

MODULAR STEP SYSTEM

Knowing each pool is unique to its landscape and Customer, the Modular Step allows for an extended entryway to fit essentially any pool width. Customers choose a left, right, and appropriate quantity of middle sections to create an extended step module to fit the pool's specifications.

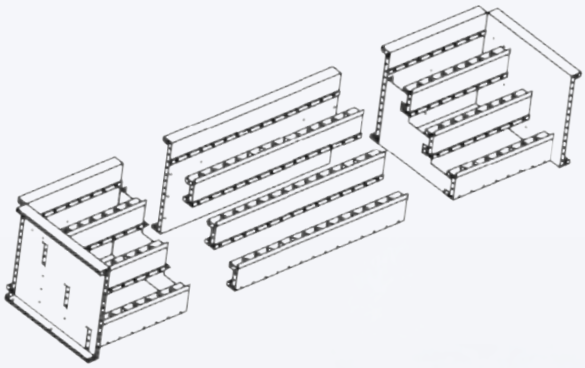

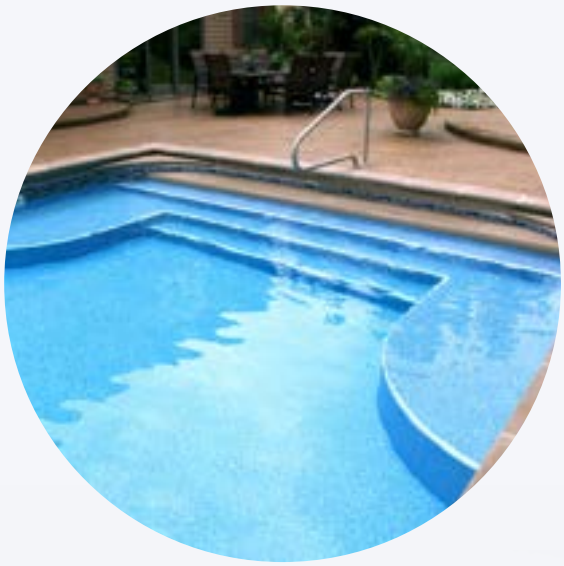

DROP-IN

DROP-IN STEPS

Ideal for pool renovation projects where a step needs to be added, Drop-Ins can be easily set during a replacement liner installation. New Drop-In designs are created as Open-Pour, while our stock Drop-Ins have availability in solid steel.

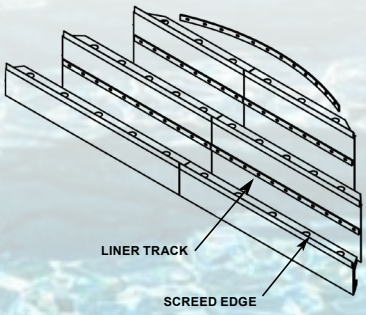

CLEARGARD™

CLEARGARD™

Our new line of Fox Pool steel steps and Boxwall Panels are manufactured with the finest North American-sourced 14-gauge steel and coated with our brand new Cleargard™ non-corrosive formula for durability that lasts the lifetime of the pool.

Our advanced design and technology work in unison to produce a structurally sound, elegant steel that fits perfectly during installation, and is prepped for a smooth vinyl liner finish.

All ClearGard products are designed with ease of installation in mind. We source and utilize the highest quality materials coupled with our advanced automated technology to ensure a perfect fit on the job site, every time.

We stand behind our product guarantees with a lifetime, one-time transferable warranty on all ClearGard panels and steps.

Cleargard™ offers superior protection against corrosion on Salt Generator Pools, up to 5x's more effective than standard galvanization. It also offers increased protection when servicing areas with a high water table or acidic ground conditions.

NON-CORROSIVE STEEL

Superior Corrosion Resistance of CLEARGARD

* Appearances of cut edge sections after salt spray test
(Thickness 0.126", coating weight 0.40/0.40 oz/ft2 , no chem treat)

* Cleargard™ produced to ASTM A1046 specifications

Cleargard is comprised of a calculated mixture of Aluminum, Zinc, and Magnesium which forms together to provide the most effective non-corrosive and scratch resistant coating for steel parts in the industry.

Al and Mg in the coating layer combine to form a fine, tightly adhered zinc-based protective film on the steel surface as time passes. This protection suppresses corrosion of the Cleargard coating.

X-BRACE™ CONSTRUCTION SYSTEM

Fox pools utilize some of the same technology used in building bridges, tall buildings, water towers and other structures that require durability & strength against high stress.

Your swimming pool holds thousands of gallons of water while holding back thousands of pounds of earth. In order to ensure structural integrity over many years, it is important that your pool walls will remain intact, regardless of the external forces. With the Fox X-Brace™ technology, you get just that. Patented by Fox, the X-Brace™ structure provides 100% support for your pool walls and pool deck without concern for internal and external pressures. Don't be fooled by imitations – Demand the "original" X-Brace™ only available from Fox Pool.

Patented by Fox and perfected over the years, the Time Tested Engineering principle has been authenticated in an exclusive Engineering Report, prepared by an independent engineering firm, proving the Fox X-Brace™ structural integrity is as we claim. For more information, speak with a Fox Dealer for a copy of the report.

SELF-SUPPORTING SYSTEM BY FOX

HOW IT WORKS

- Pool panels are supported every 2 feet by welded-on Z Bar stiffeners.
- The X-Braces™ are bolted to panels using heavy duty corrosion resistant bolts.
- Steel rods and "S" hooks anchor the X-Braces™ and the pool wall to the ground.
- A concrete footer or foundation is poured around the perimeter of the pool, creating a permanent "foundation."
- Pool can be backfilled with or without water.
- Reinforcing rod is added to connect the top of the X-Braces™ to the deck structure.
- The concrete deck encapsulates the X-Braces™ and reinforcing rod to form a unitary structure.
- Backfill settles over time, forming a thermal barrier between the deck and the ground to protect against frost upheaval.

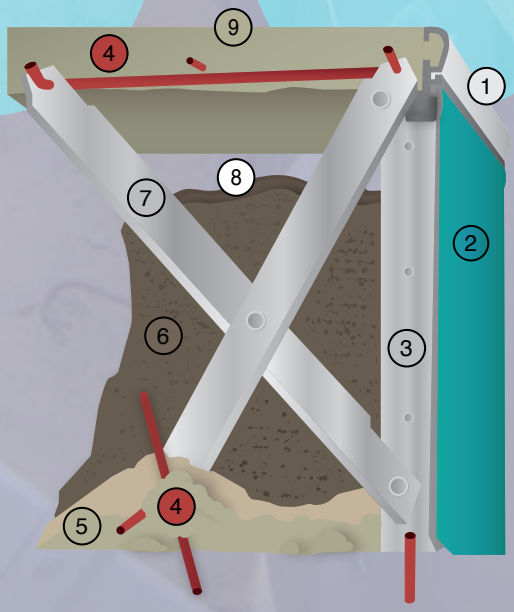

1. FOXITE Coping
2. Vinyl Liner
3. Wall Panel ClearGard Protected
4. 3/8" Steel Rods
5. Concrete
6. Settled Backfill
7. Steel X-BRACE
8. Thermal Barrier
9. Walkway

ACCESSORIES: TURNBUCKLES

ONE PIECE TURNBUCKLE

ONE PIECE TURNBUCKLE	
ITEM NO.	DESCRIPTION
CS600OPT	1 pc. Turnbuckle A-Frame
CS608DH	18" Drive Stake w/ Holes

** The 1 pc. Turnbuckle A- Frame integrates a turnbuckle and notched short angle as one unit. The bottom of the turnbuckle is crimped to allow it to bend on the A-Frame Assembly.*

THREE PIECE TURNBUCKLE

THREE PIECE TURNBUCKLE	
ITEM NO.	DESCRIPTION
CS600TA	Turnbuckle Assembly
CS606ES	Notched Short Angle
CS608DH	18" Drive Stake w/ Holes

** The 3 pc. Turnbuckle requires a turnbuckle and notched short angle that function as separate units. It also needs an 18" or 24" drive stake to be inserted into the notched short angle and used to support the Turnbuckle Assembly.*

***CS600OPT**

CS606ES

CS608DH

TEK SCREWS

TEK SCREWS	
ITEM NO.	DESCRIPTION
BP000TS	#12 Hex Tek Screw - 110 per box

BENT BOLTS

BENT BOLTS	
ITEM NO.	DESCRIPTION
BP500JS	56 - 2" Bent Bolts w/ Nuts (BP838HN) (Grecian)

BOLT PACKS

BOLT PACKS	
ITEM NO.	DESCRIPTION
BP090JS	216 Nuts/Bolts Per Pack

7' DROP-IN STEP BOLT PACK

DROP-IN STEP BOLT PACKS	
ITEM NO.	DESCRIPTION
BP500DS	20 Hex Screws (BP375HB) 12 Stair Clips (SP0746-12) 26 Slotted Flathead Screws (BP834MB) 26 Bolts with Nuts (BP810zMB) 52 3/8" Serrated Hex Nuts (BP838HN) per pack

LARGE STEP BOLT PACKS

LARGE STEP BOLT PACKS	
ITEM NO.	DESCRIPTION
BP810MB	Bolts w/ Nuts (BP838HN)
SP0746-12	Stair Clips

VERSA BRACE BOLT PACKS

VERSA BRACE BOLT PACKS	
ITEM NO.	DESCRIPTION
BP00TS	#12 Hex Tek Screw - 110 per box

THE BACKYARD POOLSCAPE SERIES: A PLUNGE POOL COLLECTION

The thought of owning a pool is often a dream, and remains a dream for today's average Homeowner. It may be that your backyard is 'too small' or your budget won't accommodate a standard pool. Perhaps your busy lifestyle doesn't mesh with the longterm upkeep and maintenance that a large luxury item requires.

That may be too much, but an empty yard is not enough... *right?*

To today's Homeowner, we *hear* you, we *see* you. You want a manageable space that you can unwind, and simply *escape into* after a long day. Our *Backyard Poolscape Series* is a plunge pool collection that offers luxury and paradise on a smaller, more manageable scale. Whatever it's purpose– relaxation, exercise/rehabilitation, a gathering place, a peaceful getaway... this collection will allow you to

Escape to what is meant for you.

PLUNGE *Shapes & Sizes*

Rectangle

8′ x 16 ′• 10′x 20′ • 12′x 24′
All sizes include Poured Step
Optional Additions: Sundeck, Drop-in Deep End Bench

Oval

8′ x 16′
Includes Poured Step
Optional Addition:
Drop-in Deep End Bench

Oasis

9′ x 20′
Includes Poured Step
Optional Addition:
Drop-in Deep End Bench

FEATURES

All Plunge Pool Kits from the *Backyard Poolscape Series* Include:

- 54” high galvanized steel walls
- Turnbuckle braces
- Versa braces ***(By request only)***
- 1 Skimmer panel & 2 Return panels
- Choice of Fox Pool's CR or HZ coping
  (Autocover capabilities with no coping option)

Our Ultimate Pool designs provide the ultimate versatility. Whatever the landscape requires or your customer's dream idea consists of, the Ultimate Pool comes in shapes and sizes to fit any space.

Whether inground, above ground, or semi-inground, Ultimate Pools are backed by a lifetime warranty.

Your Ultimate Pool experience begins with us!

ULTIMATE VERSATILITY

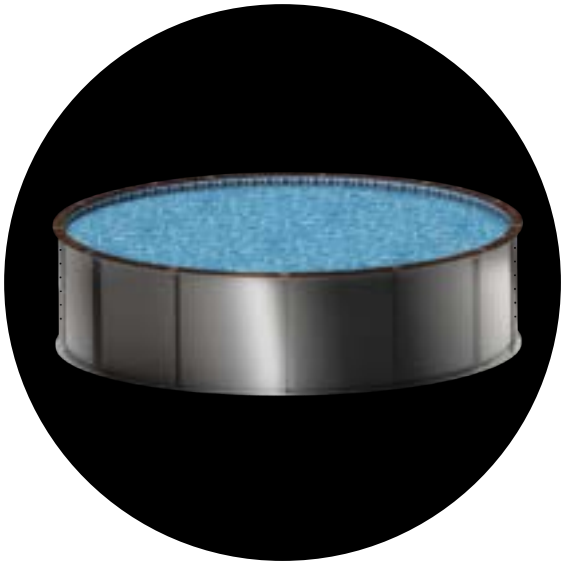

FLEXIBLE INSTALLATION

The Ultimate is offered in three standard shapes and multiple sizes. As an additional option, our round shape option can be assembled as an above ground pool in addition to inground and semi-inground. The Grecian, Oval, Modified Rectangle, and Oasis shapes must be submerged in the ground at least 16” and require buttress supports and a concrete collar similar to an inground pool.

DURABILITY

ClearGard coating provides long lasting protection from corrosion on our walls and buttress supports, and is backed by a limited lifetime warranty. Combining this with a concrete bonding ring on oval and grecian pools provides lasting strength in any soil.

SUPPORT

The 14-gauge ClearGard coated steel buttress, when combined with a concrete bond beam, provides wall support for straight walls on Oval, Modified Rectangle, Oasis, and Grecian pools. The buttress support system helps ensure the pool walls are straight and will last the lifetime of the pool.

CUSTOMIZATION

Customization is the Fox way, and Ultimate Pools are no exception. Your customers can tailor their choices to fit their needs for style and functionality.

Each shape comes with 4 options to customize:

1. Synthetic Wood
2. PC Bullnose Coping
3. Synthetic Wood & Quaker Thermoplastic Step
4. PC Bullnose Coping & Quaker Thermoplastic Step

*Please note, vinyl liners and ladders are no longer included in the Ultimate Kits. We have partnered with 5 preferred liner manufacturers to ensure the highest-quality liners will be installed.

THE ULTIMATE POOL BY FOX

SIZES & SHAPES	SQUARE FEET	GALLONS
15' ROUND	184	5,500
18' ROUND	250	7,400
21' ROUND	370	11,000
24' ROUND	459	13,600
15 x 23 OVAL	307	9,100
15 x 31 OVAL	430	12,800
18 x 34 OVAL	535	15,900
**12 x 22 GRECIAN	236	7,000
14 x 30 GRECIAN	390	11,600
16 x 32 GRECIAN	500	14,900
18 x 38 GRECIAN	649	19,300
20 x 40 GRECIAN	793	23,600
12 x 26 MODIFIED RECTANGLE	340	10,000
14 x 34 MODIFIED RECTANGLE	513	15,200
18 x 34 MODIFIED RECTANGLE	652	19,400
18 x 38 MODIFIED RECTANGLE	727	21,600
20 x 42 MODIFIED RECTANGLE	888	26,400
**13 X 21 OASIS	214	6,300
16 X 28 OASIS	328	9,700
18 X 32 OASIS	457	13,600

** Note: Standard Water Depth in all Ultimate Pools is 4'.*
*** Not available with Quaker thermoplastic Stair Option*

SHAPE YOUR SPACE

Fox Pool's variety of Ultimate Pool styles provide you the ability to choose the right look & fit for your environment.

The Ultimate Pool can be installed above ground, semi-inground, or completely inground in either our standard Grecian, Modified Rectangle, Oval, or Oasis shapes.

NEW FOR 2026

GRECIAN

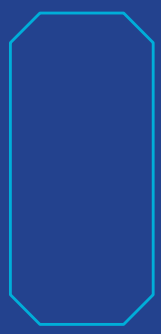

MODIFIED RECTANGLE

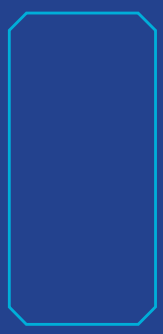

OVAL

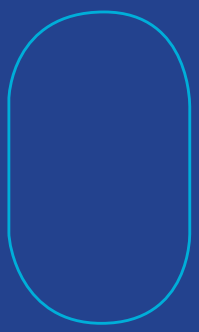

OASIS

ROUND

ABOVE GROUND
SEMI- INGROUND
INGROUND

All Ultimate Pool Kits include:

- 14-gauge galvanized Cleargard coated steel walls and buttress supports (if needed)
- Top Rail (chosen by Customer)
- Inground-quality skimmer and return
- Hardware, drive stakes, and joint covers

BUILD MORE POOLS

with the FOX ULTIMATE POOL

PLASTICS

Quaker Plastics, a brand within Fox Pool, provides a wide range of products to the swimming pool and construction industries: pool steps, deck and paver drains, liner locks and control joints help to provide a complete offering for backyards and patios. Quaker also produces specialty items for industrial and consumer products.

Our trusted reputation to provide engineering solutions is backed by a proven and high-quality product line produced with our state-of-the-art manufacturing processes.

Quaker Plastics

DECK DRAIN
CONCRETE PRODUCTS
DISCHARGE HOSE
LINER TRACK & HANGERS

COLOR GUIDE

COLOR GUIDE

PAVER GRAY

(for paver drain and paver overlay only)

GRAY

(for all stock products except pavers)

WHITE

TAN

The color representations have been printed as closely as possible to actual colors, however, product color may vary from photograph.

THE FOLLOWING QUAKER PRODUCTS ARE AVAILABLE IN THE COLORS TO THE LEFT:

- 3” Water Hog® Deck Drain and Fittings
- 4” Water Hog® Deck Drain and Fittings
- 2” Paver Drain and Fittings
- 1” Paver Overlay
- 2” Square Drain System and Fittings
- Deck Drain-A-Way® and Fittings
- Streamline and Fittings
- Arrowhead™ Control Joint
- Arrowhead™ Accent Strip
- Replacement Caps

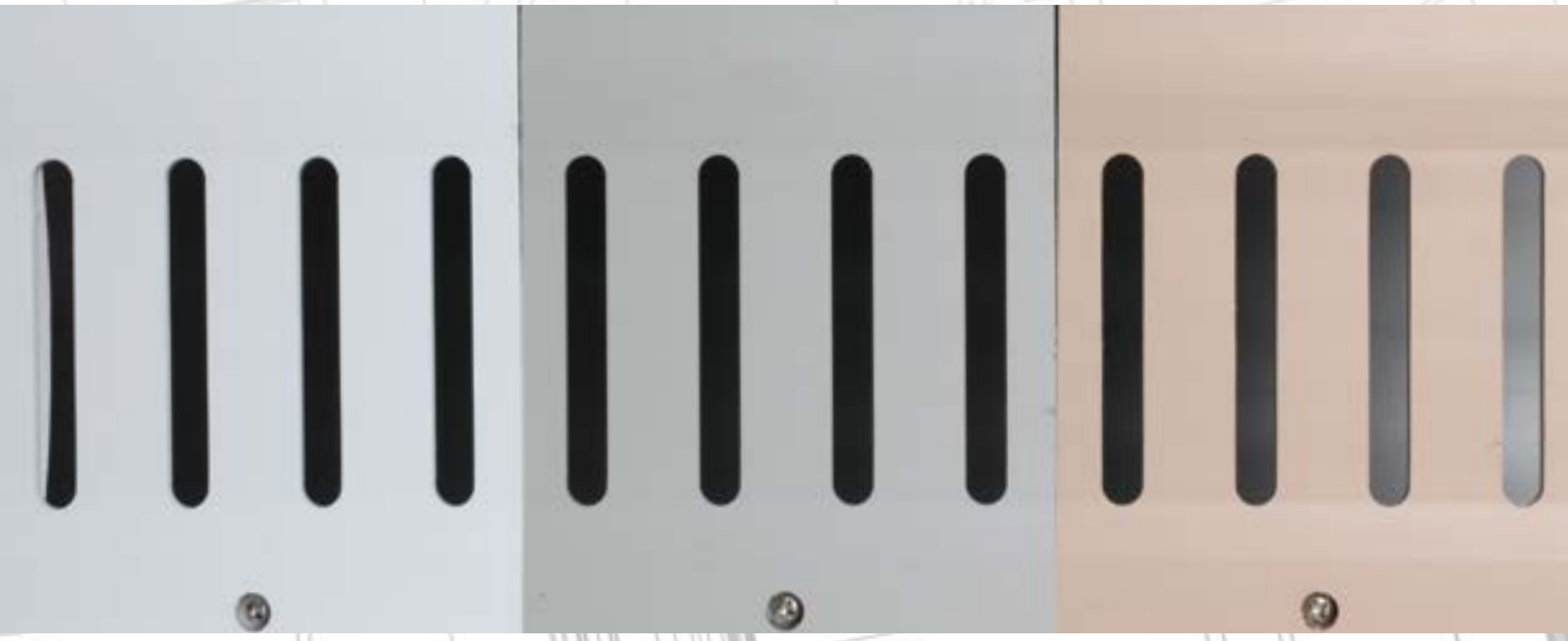

QP-6251: 4" WATER HOG®

4" DECK DRAIN SYSTEM WITH GRAY BASE

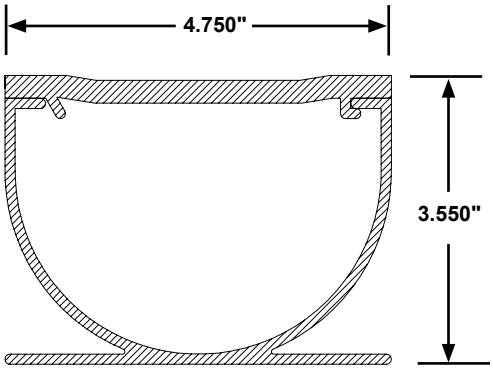

4" WATER HOG® FITTINGS

FITTINGS FOR 4" DECK DRAIN SYSTEM FIT ITEM #: QP-6251 AND QP-6252

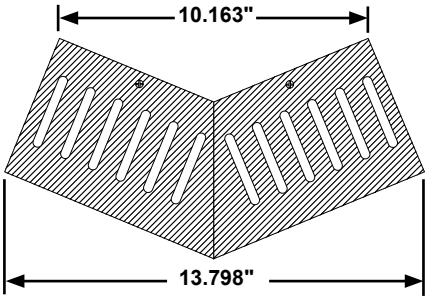

QP-6253 45º

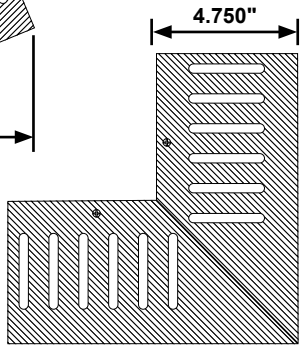

QP-6254 90º

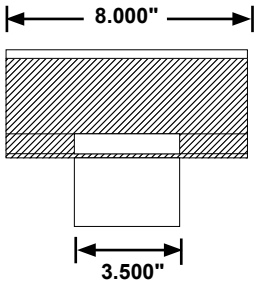

QP-6256 Bottom Drainout

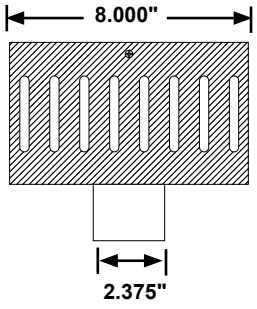

QP-6255 Side Drainout

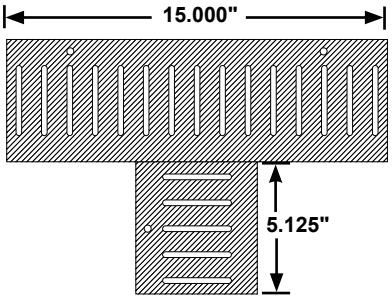

QP-6257 Universal Tee

4" WATER HOG® MODEL NUMBERS Available Colors: white, gray, and tan (W,G,T)		
ITEM NO.	LENGTH	PACKAGING
QP-6251 (W,G,T)	6 ft.	24 ft./case, four 6-foot pcs.
QP-6252 (W,G,T)	10 ft.	40 ft./case, four 10-foot pcs.
Case includes four connectors, one extra screw packet, protective tape, and one instruction sheet. 6 ft. is able to ship UPS, 10 ft. is not.		

4" WATER HOG® FITTINGS Available Colors: white, gray, and tan (W,G,T)		
ITEM NO.	STYLE FITTING	PER CASE
QP-6253 (W,G,T)	45°	1
QP-6254 (W,G,T)	90°	1
QP-6255 (W,G,T)	Side Drainout	1
QP-6256 (W,G,T)	Bottom Drainout	1
QP-6257 (W,G,T)	Universal Tee	1
QP-4951 (W,G,T)	4" Drain Tops only, 6' length	8
QP-4973	Connector (gray only)	1
QP-496A	End Plug/End Adapter Kit	1 ea.
QP-496B	End Adapter (gray fitting, white base plate)	1
QP-496C	End Plug (gray fitting, white base plate)	1

DECK DRAINS

QP-6241: 3" WATER HOG®

3" DECK DRAIN SYSTEM WITH GRAY BASE

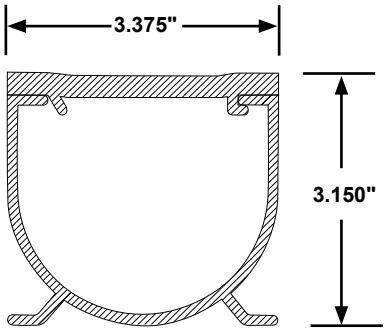

3" WATER HOG® FITTINGS

FITTINGS FOR 3" DECK DRAIN SYSTEM FIT ITEM #: QP-6241 AND QP-6242

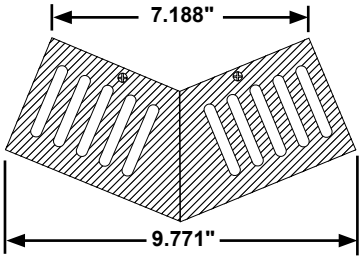

QP-6243 45°

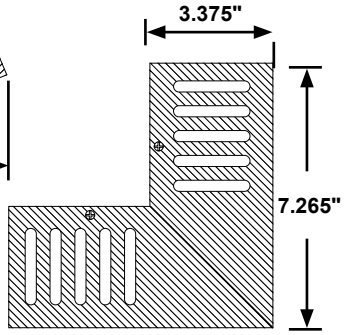

QP-6244 90°

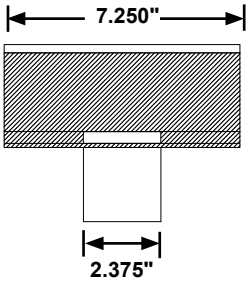

QP-6247 BOTTOM DRAINOUT

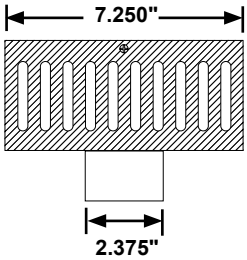

QP-6248 SIDE DRAINOUT

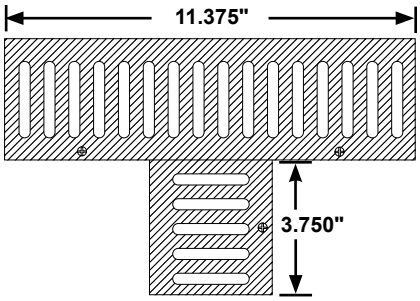

QP-6245 UNIVERSAL TEE

3" WATER HOG® MODEL NUMBERS Available Colors: white, gray, and tan (W,G,T)		
ITEM NO.	LENGTH	PACKAGING
QP-6241 (W,G,T)	6 ft.	48 ft./case, eight 6-foot pcs.
QP-6242 (W,G,T)	10 ft.	60 ft./case, six 10-foot pcs.
Case includes connectors (8 pcs. in 6-ft. case, 6 pcs. in 10-ft. case), one extra screw packet, protective tape, and one instruction sheet. 6 ft. is able to ship UPS, 10 ft. is not.		

3" WATER HOG® FITTINGS Available Colors: white, gray, and tan (W,G,T)		
ITEM NO.	STYLE FITTING	PER CASE
QP-6243 (W,G,T)	45°	2
QP-6244 (W,G,T)	90°	2
QP-6245 (W,G,T)	Universal Tee	2
QP-6247 (W,G,T)	Bottom Drainout	2
QP-6248 (W,G,T)	Side Drainout	2
QP-5701 (W,G,T)	3" Drain Tops only, 6' length	8
QP-5712	Connector (gray only)	1
QP-572A	End Adapter (gray fitting, white base plate)	1
QP-572B	End Plug (gray fitting, white base plate)	1
QP-572C	End Plug/End Adapter Kit	1 ea.

QP-6972: 2" REMOVABLE TOP DECK DRAIN

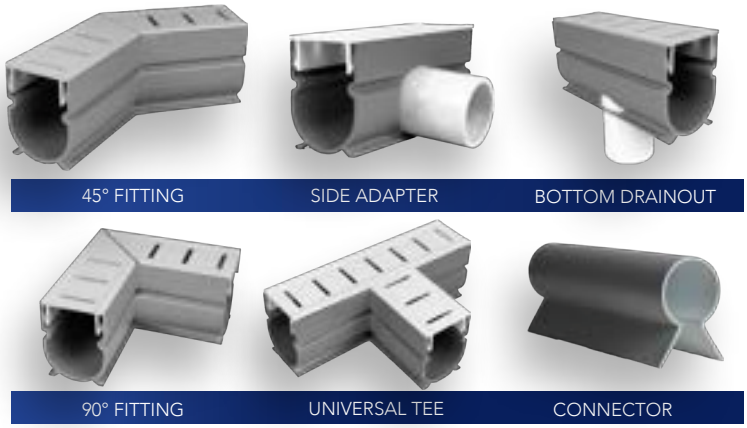

Not shown: End Cap (QP-5181-1 & 5182-1).

2" REMOVABLE TOP DRAIN MODEL NUMBERS Available Colors: white, gray, and tan (W,G,T)		
ITEM NO.	LENGTH	PACKAGING
QP-6972W	10 ft.	80 ft./case, eight 10-foot pcs.
QP-6972G	10 ft.	80 ft./case, eight 10-foot pcs.
QP-6972T	10 ft.	80 ft./case, eight 10-foot pcs.
Includes four adapters in a box of eight.		

2" REMOVABLE TOP DRAIN FITTINGS Available Colors: white, gray, and tan (W,G,T)		
ITEM NO.	STYLE FITTING	PER CASE
QP-6973 (W,G,T)	45°	2
QP-6974 (W,G,T)	90°	2
QP-6978 (W,G,T)	Side Adapter	2
QP-6977 (W,G,T)	Bottom Drainout	2
QP-6975 (W,G,T)	Universal Tee	2
QP-6976*	End Cap	4
QP-6979*	End Drain Out	1 pc.
QP-6413-1	Connectors (white)	1 pc.
QP-6411-1	Connectors (gray)	1 pc.
*Available in WHITE ONLY		

BENEFITS OF 2" REMOVABLE TOP DECK DRAIN SYSTEM

- Heavy wall, bondable, drain system and all components are made from rigid PVC, proven in years of outdoor applications with lasting beauty.
- Adapts to all standard 1½" plastic fittings.
- Joints bond together like PVC pipe, with PVC connectors supplied.
- Removable top for easy clean out.
- Drain offers heavier walls than existing systems, as well as greater rigidity and durability.
- Strong water volume capacity.
- Taped top for extra strength when peeling off after concrete is in place.
- Smooth concave top surface provides better drainage and minimizes collection of dirt and debris.

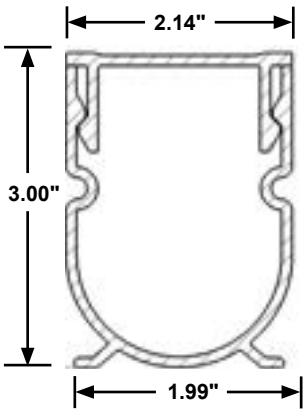

QP-5171: 2" SQUARE DRAIN SYSTEM

U.S. Patent No. 6,729,795

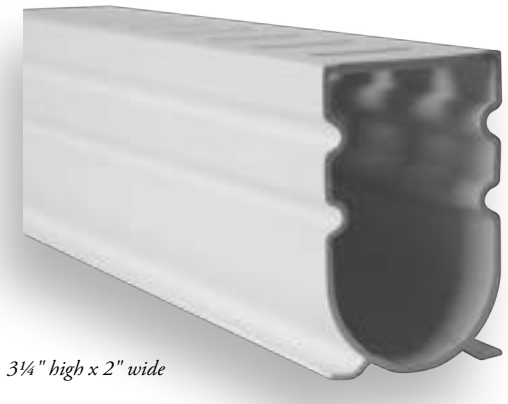

3¼" high x 2" wide

Adaptable to standard 1½" fittings and stands on its own feet for easy upright installation.

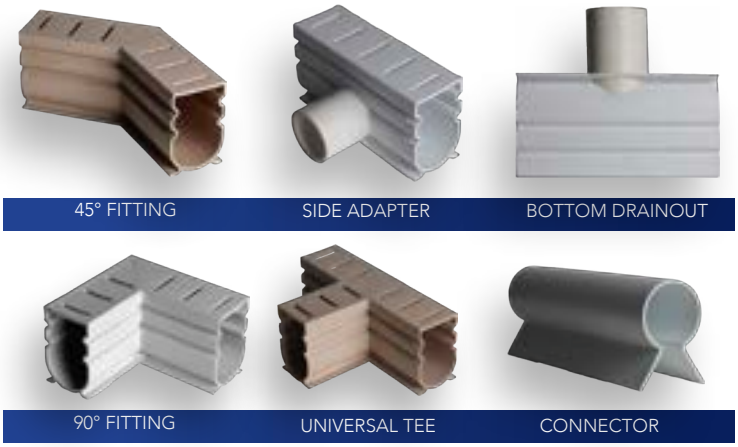

Not shown: End Cap (QP-5181-1 & 5182-1), and Surface clean-out plug (QP-988-1).

2" SQUARE DRAIN SYSTEM MODEL NUMBERS Available Colors: white, gray, and tan (W,G,T)		
ITEM NO.	LENGTH	PACKAGING
QP-5171 (W,G,T)	10 ft.	80 ft./case, eight 10-foot pcs.
Includes eight connectors (QP-5981-1), two surface clean-out plugs (QP-988-1), double-protective tape, and one instruction sheet.		

2" SQUARE DRAIN SYSTEM FITTINGS Available Colors: white, gray, and tan (W,G,T)		
ITEM NO.	STYLE FITTING	PER CASE
QP-5172 (W,G,T)	45°	8
QP-5173 (W,G,T)	90°	8
QP-5174 (W,G,T)	Side Adapter	4
QP-5175 (W,G,T)	Bottom Drainout	4
QP-5176 (W,G,T)	Universal Tee	4
QP-5181-1*	End Cap, 3⅜" length	1 pc.
QP-5182-1*	End Cap, 1" length	1 pc.
QP-988-1*	Surface Clean-out Plugs	1 pc.
QP-5981-1*	Connectors	1 pc.
*Available in WHITE ONLY		

BENEFITS OF 2" SQUARE DRAIN SYSTEM

- Heavy wall, bondable, drain system and all components are made from rigid PVC, proven in years of outdoor applications with lasting beauty.
- Adapts to all standard 1½" plastic fittings.
- Joints bond together like PVC pipe, with PVC connectors supplied.
- Clean-outs adapt to 1½" threaded (purchased locally) or connector (supplied) for end clean-outs with either threaded or slip end cap.
- Should a surface clean-out hole be desired, simply drill a 1" hole and snap in our clean-out fitting. To clean, remove plug and flush with hose. There are two supplied in every carton.
- Drain offers heavier walls than existing systems, as well as greater rigidity and durability.
- Strong water volume capacity.
- Taped top for extra strength when peeling off after concrete is in place.
- Smooth concave top surface provides better drainage and minimizes collection of dirt and debris.

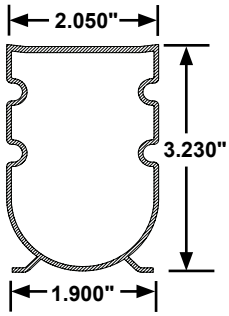

QP-3701: DECK DRAIN-A-WAY® SYSTEM II

U.S. Patent No. 4,490,067 Canada Patent No. 1,221,043

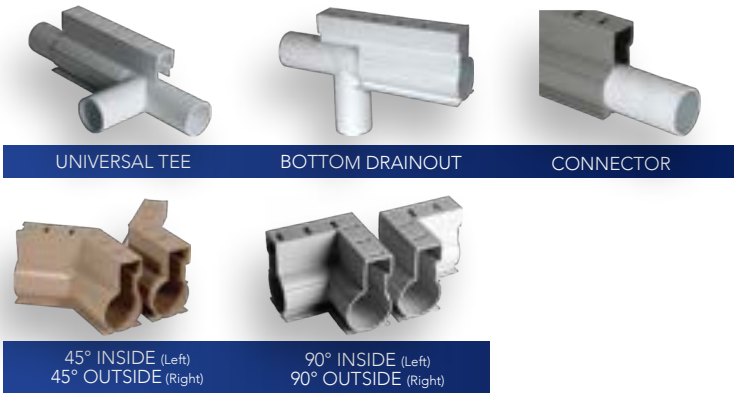

Adaptable to standard 1½" fittings and stands on its own feet for easy upright installation.

DECK DRAIN-A-WAY® SYSTEM II MODEL NUMBERS Available Colors: white, gray, and tan (W,G,T)		
ITEM NO.	LENGTH	PACKAGING
QP-3701 (W,G,T)	8 ft.	72 ft./case, nine 8-foot pcs.
Includes nine connectors (QT-125-1), two surface clean-out plugs (QP-988-1), double-protective tape, and one instruction sheet.		

DECK DRAIN-A-WAY® SYSTEM II FITTINGS Available Colors: white, gray, and tan (W,G,T)		
ITEM NO.	STYLE FITTING	PER CASE
QP-3702 (W,G,T)	45° Inside	4
QP-3703 (W,G,T)	45° Outside	4
QP-3704 (W,G,T)	90° Inside	4
QP-3705 (W,G,T)	90° Outside	4
QP-3706 (W,G,T)	Universal Tee	4
QP-3709 (W,G,T)	Bottom Drainout	4
QP-1031-1*	Top End Caps	1 pc.
QP-988-1*	Surface Clean-out Plugs	1 pc.
QT-125-1*	Connectors	1 pc.
**Available in WHITE ONLY*		

BENEFITS OF DECK DRAIN-A-WAY® SYSTEM II

- Heavy wall, bondable, drain system and all components are made from rigid PVC, proven in years of outdoor applications with lasting beauty.
- Adapts to all standard 1½" plastic fittings.
- Joints bond together like PVC pipe, with PVC connectors supplied.
- Clean-outs adapt to 1½" threaded (purchased locally) or connector (supplied) for end clean-outs with either threaded or slip end cap.
- Should a surface clean-out hole be desired, simply drill a 1" hole and snap in our clean-out fitting. To clean, remove plug and flush with hose. There are two supplied in every carton.
- Drain offers heavier walls than existing systems, as well as greater rigidity and durability.
- Strong water volume capacity.
- Taped top for extra strength when peeling off after concrete is in place.
- Smooth concave top surface provides better drainage and minimizes collection of dirt and debris.

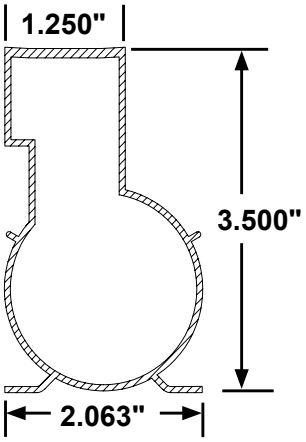

DECK DRAINS

QP-6401: 2" PAVER DRAIN

PAVER DRAIN MODEL NUMBERS Available Colors: white, gray, and tan (W,G,T)		
ITEM NO.	LENGTH	PACKAGING
QP-6401 (W,G,T)	10 ft.	80 ft./case, eight 10-foot pcs.
Includes eight connectors (QP-6411-1 or QP-6413-1), 48 securing clips (QP-1003), double-protective tape, and instruction sheet.		

PAVER DRAIN FITTINGS Available Colors: white, gray, and tan (W,G,T)		
ITEM NO.	STYLE FITTING	PER CASE
QP-6402 (W,G,T)	45°	10
QP-6403 (W,G,T)	90°	10
QP-6404 (W,G,T)	Bottom Drainout	4
QP-6405	End Plug (white only)	4
QP-6406 (W,G,T)	Tee Fitting	4
QP-1003	Securing Clips (white only)	48
QP-6411-1	Connector (gray)	1 pc.
QP-6413-1	Connector (white)	1 pc.
QP-5183-1	End Cap (white only)	1 pc.
QP-988-1	Clean Out Plug (white only)	1 pc.

- 2⅜" Paver Height - designed for standard pavers.
- Tan, gray and white - three designer colors to match the latest paver styles.
- Securing clips - packaged complete with 48 clips for locking underneath pavers. Alternate side-to-side or all on one side to fit flush with walls.
- Concave top - ensures superior drainage, minimizes debris collection.
- Ready to install - includes eight connectors, securing clips (six per 10' length), protective tape, and instruction sheet.
- Adapts to all standard 1½" plastic fittings.

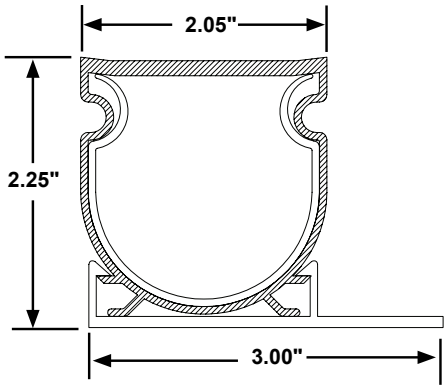

BOTTOM WIDTH INCLUDES SECURING CLIP. ALL DIMENSIONS ARE NOMINAL.

QP-7201: STREAMLINE | LOW PROFILE DRAIN

Streamline is the unique drain from Quaker Plastics. With its slim opening, Streamline blends seamlessly into the most elegant patio or deck.

- Visible entry channel only ½" wide.
- Recyclable, protective, removable filler strip for installation, no tape/no residue.
- Designed for pavers and concrete decks.
- Available in white, gray, and tan.
- Adapts to all standard 1½" plastic fittings.

STREAMLINE MODEL NUMBERS Available Colors: white, gray, and tan (W,G,T)		
ITEM NO.	LENGTH	PACKAGING
QP-7201 (W,G,T)	8 ft.	48 ft./case, six 8-foot pcs.
Case includes 6 connectors and instruction sheet.		

STREAMLINE FITTINGS Available Colors: white, gray, and tan (W,G,T)		
ITEM NO.	STYLE FITTING	PER CASE
QP-7202 (W,G,T)	45° Inside Corner	2
QP-7203 (W,G,T)	45° Outside Corner	2
QP-7204 (W,G,T)	90° Inside Corner	2
QP-7205 (W,G,T)	90° Outside Corner	2
QP-7206 (W,G,T)	Bottom Drainout	2
QP-7207	End Cap - (1 left, 1 right)	2
QP-6413-1	Connector (white)	1

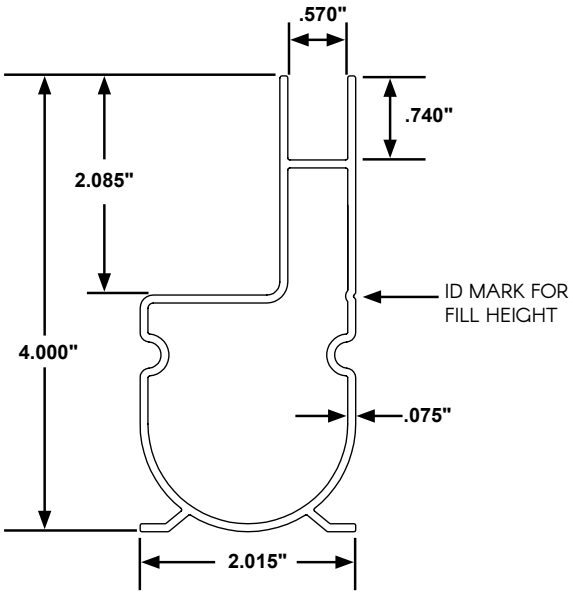

QP-6611: 1" PAVER OVERLAY

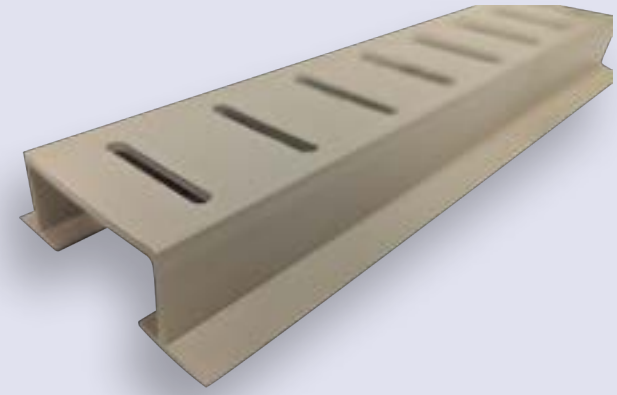

The 1" Paver Overlay is perfect for renovation.

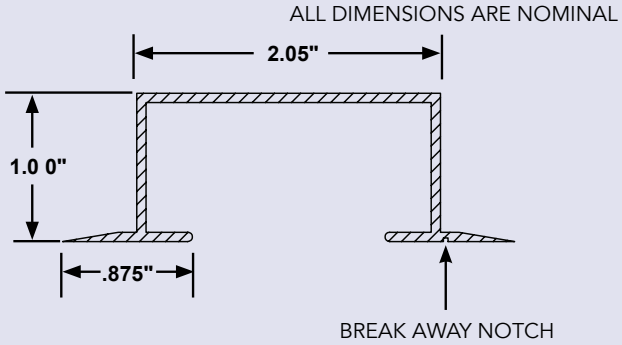

1" PAVER OVERLAY MODEL NUMBERS Available Colors: white, gray, and tan (W,G,T)		
ITEM NO.	LENGTH	PACKAGING
QP-6611W (white)	5 ft.	100 ft./case, twenty 5-foot pcs.
QP-6611G (gray)	5 ft.	100 ft./case, twenty 5-foot pcs.
QP-6611T (tan)	5 ft.	100 ft./case, twenty 5-foot pcs.
Includes Double-protective tape and one instruction sheet.		

One-inch Paver Overlay is perfect for renovating an old, damaged deck. The overlay is easily installed on top of the old drain between the new surface paver stones, blending seamlessly with your landscape projects. Considerable expense is avoided in digging up old drain and replacing with a new system. Simpler and less time-consuming than replacement caps.

- Twenty (20) 5-foot lengths (100 ft./case).
- One side of overlay is notched for easy break-a-way for use against flat surfaces.
- Available in white, gray, and tan.
- UPS able carton.

QP-595: REPLACEMENT CAP FOR QUAKER DECK DRAIN

REPLACEMENT CAP FOR QUAKER DECK DRAIN MODEL NUMBERS Available Colors: white, gray, and tan (W,G,T)		
ITEM NO.	LENGTH	PACKAGING
QP-595 (W,G,T)	5 ft.	100 ft./case, twenty 5-foot pcs.

Ideal to repair common 2" drain systems. Fits Quaker's 2" Square Drain (QP-5171). Simply saw out damaged area, insert replacement drain top, and bond it in place.

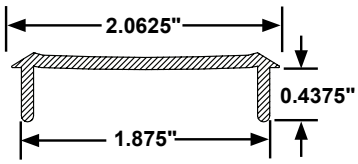

QP-2551: REPLACEMENT CAP FOR COMMON DECK DRAIN

REPLACEMENT CAP FOR COMMON DECK DRAIN MODEL NUMBER Available Colors: white, gray, and tan (W,G,T)		
ITEM NO.	LENGTH	PACKAGING
QP-2551 (W,G,T)	4 ft.	96 ft./case, twenty four 4-foot pcs.

Ideal to repair commonly used drain systems. Fits Quaker's Deck Drain-A-Way® (QP-3701). Simply saw out damaged area and insert Quaker's replacement drain top and bond it in place.

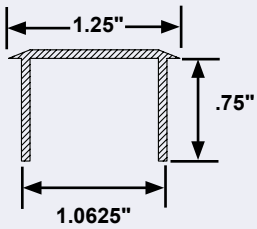

QP-781: ARROWHEAD™ CONTROL JOINT

ARROWHEAD™ CONTROL JOINT MODEL NUMBERS Available Colors: white (W)		
ITEM NO.	LENGTH	PACKAGING
QP-781 (W)	12 ft.	240 ft./case, twenty 12-foot pcs.

Unique arrow-shape presses easily into concrete - no channels to obstruct installation. Locks into concrete with minimum water seepage. A layer of peel off tape protects the top during installation.

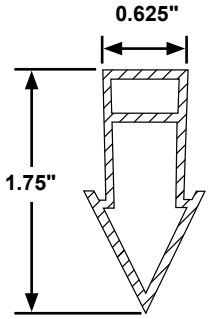

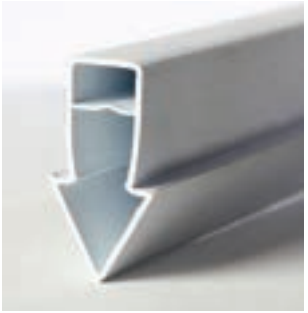

DISCHARGE HOSE & LINER LOCKS

HEAVY DUTY DISCHARGE HOSE

HEAVY DUTY DISCHARGE HOSE MODEL NUMBERS		
ITEM NO.	LENGTH	ROLLS PER CASE
QT-131*	1½" x 25' with clamp	6
QT-132*	1½" x 50' with clamp	6
QT-133	1½" x 200' without clamp	1
QT-261	2" x 200' without clamp	1
QT-262*	2" x 50' with clamp	5

** Available in shrink-wrap packaging.*

- Highest quality vinyl discharge hose, 20% thicker than the competition.
- Most popular sizes are shrink-wrapped in retail-friendly packaging for best shelf visibility and easier handling.
- Stainless steel clamp included with retail-size rolls.
- Color-coded for easy identification and convenient inventorying.

LINER BEAD WEDGE LOCK

LINER BEAD WEDGE LOCK MODEL NUMBERS			
ITEM NO.	LENGTH	COLOR	PACKAGING
QP-1561	1500 ft.	White	1 spool
QP-1562	120 ft. per bag	White	12 bags per box
QP-1564	120 ft. per bag	Blue	12 bags per box
QP-1566	120 ft. per bag	Black	12 bags per box
QP-1568	120 ft. per bag	Gray	12 bags per box
QP-1560-Variety	120 ft. per bag	White, Black, Gray, & Blue	3 bags of each color (12 bag total in case)

High-quality flexible vinyl designed as a wedge (or shim) to secure liner bead to coping track. Available in white, blue, black, and gray.

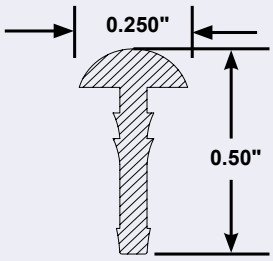

SIDE MOUNT LINER TRACK

SIDE MOUNT LINER TRACK MODEL NUMBER		
ITEM NO.	LENGTH	PACKAGING
QP-521	8 ft.	400 ft./case, fifty 8-foot pcs.

Mounts on the side of pool walls to hold liner securely. Ideal for pools in which coping cannot be easily removed or for installing liners in concrete pools. White PVC.

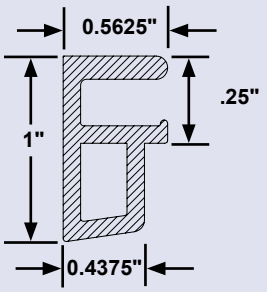

ALL DIMENSIONS ARE NOMINAL

TOP MOUNT LINER TRACK

TOP MOUNT LINER TRACK MODEL NUMBER		
ITEM NO.	LENGTH	PACKAGING
QP-531	8 ft.	512 ft./case, sixty four 8-foot pcs.

Ideal for new pools or installing a liner in a pool with easily removable coping or with broken coping. Install Top Mount Liner Track on top of the pool wall to hold liner securely. White PVC.

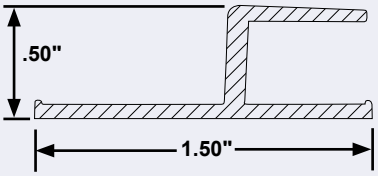

ALL DIMENSIONS ARE NOMINAL

TOP MOUNT RADIUS CUT LINER TRACK

TOP MOUNT LINER TRACK MODEL NUMBER		
ITEM NO.	LENGTH	PACKAGING
QP-2022	8 ft.	208 ft./case, twenty six 8-foot pcs.

For use in free-form vinyl liner pools. Conforms to pool radius. White PVC.

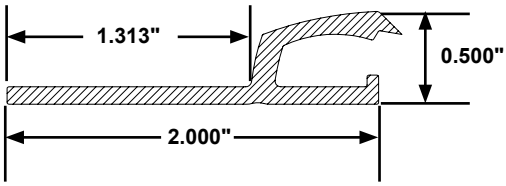

6" RADIUS CORNER FOR TOP MOUNT LINER TRACK

TOP MOUNT LINER TRACK MODEL NUMBERS		
ITEM NO.	LENGTH	PACKAGING
QP-532	24 in.	set of four 24 in. pcs.

Perfectly matches Top Mount Liner Track (QP-531). These pre-notched corner lengths are easily shaped by hand to form any corner up to a 6" radius. White PVC.

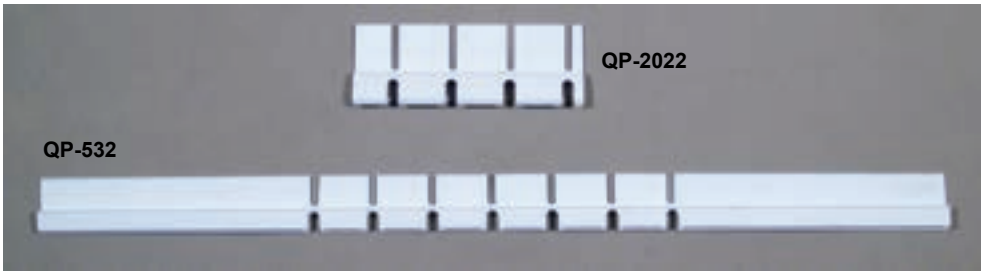

LINER HANGERS

DELUXE ABOVE GROUND POOL REPLACEMENT LINER HANGER

DELUXE ABOVE GROUND POOL REPLACEMENT LINER HANGER		
ITEM NO.	LENGTH	PACKAGING
QP-7141	56.5 in.	188 ft./case, forty 56.6" in. pcs.

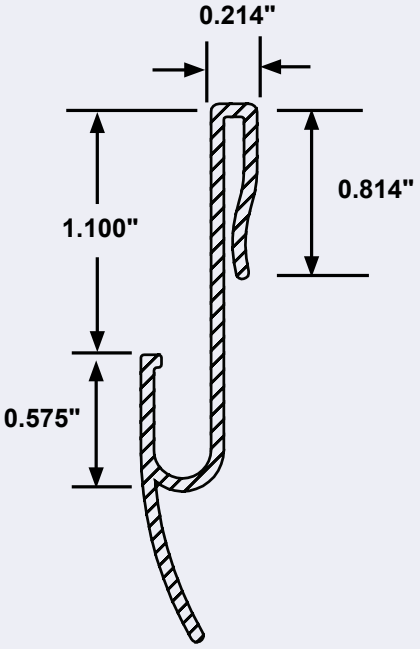

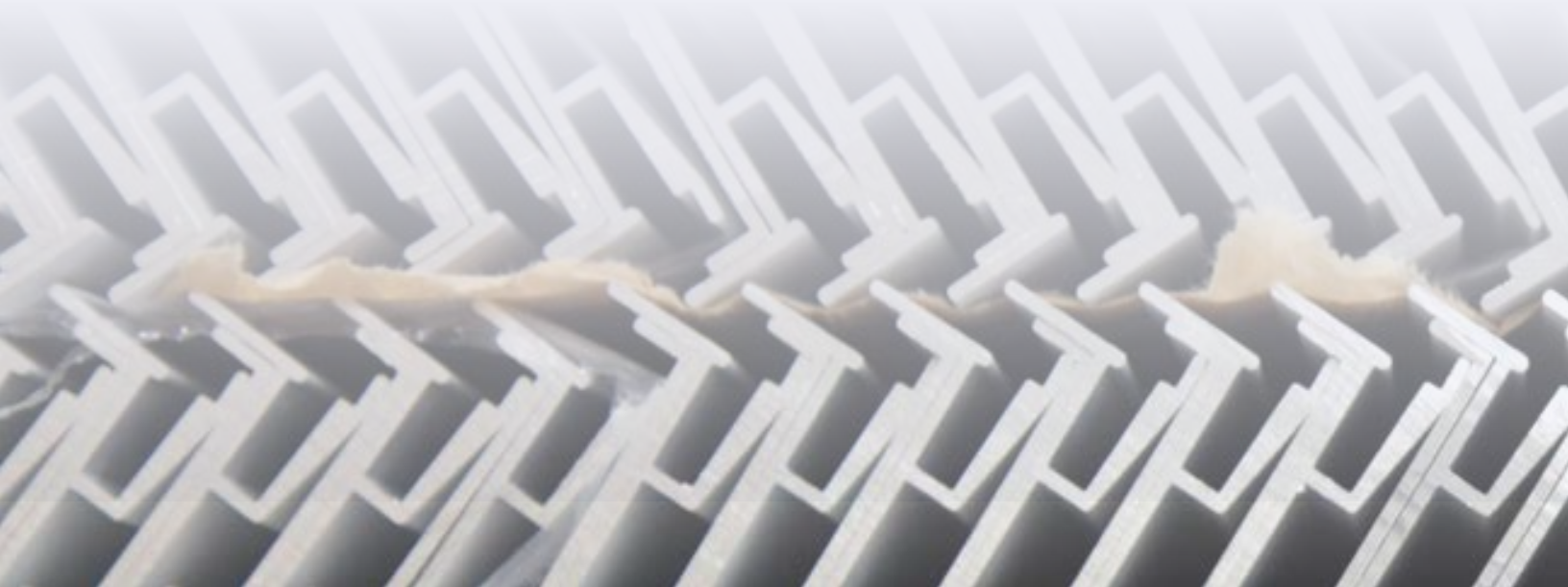

CERAMIC TILE HOLDER FOR NEW POOLS

CERAMIC TILE HOLDER MODEL NUMBER		
ITEM NO.	LENGTH	PACKAGING
QP-2681	6 ft.	120 ft./case, twenty 6-foot pcs.

You can create the elegant look of a higher cost pool just by adding real tile to an ordinary vinyl liner pool built with Quaker's patented tile/coping system. Practical, as well as stylish, real tile protects the vinyl from ultraviolet deterioration that is so common in the Sunbelt.

This unique system has been tested for over thirty years on hundreds of pools and has withstood the harsh winters of the Northeast with amazing durability. Frost proof tiles are available from local tile distributors. Accommodates a 6" x 6" tile. White PVC.

SIGN HOLDER WITH 'NO DIVING' SIGNAGE

SIGN HOLDER WITH "NO DIVING" SIGN MODEL NUMBER		
ITEM NO.	LENGTH	PACKAGING
QP-3162	3½" h x 16¾"w	200 sign holders with sign affixed per case
QP-3162-1	3½" h x 16¾"w	Single Piece

The white plastic sign holder is ideal to display "No Diving" signs in new or existing vinyl liner pools. Patented lock-in edge snaps in above the existing liner bead.

The Sign Holder can be easily inserted around the pool as recommended by pool manufacturers. Here's a simple, clean, effective, and low cost way to equip all pools with important safety signage.

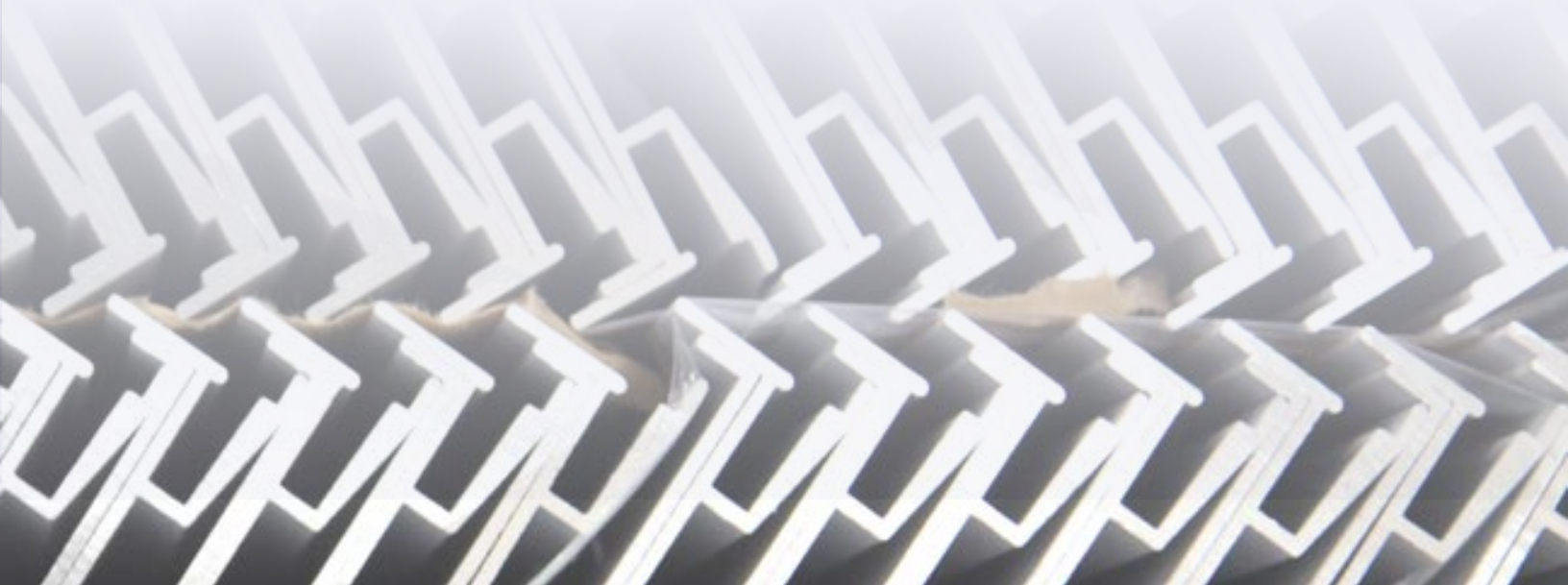

COPING & LINER TRACK

An essential part to any inground pool, coping is designed as a protective cap, a decorative border, and a comfortable space to lounge, jump from, and stand at the pool's edge. Fox provides a variety of coping options to satisfy style preferences, and accommodate your new pool build or renovation project needs.

PROTECTION & ELEGANCE

FOXITE II
FOX CANTILEVER
COPING & LINER TRACK OPTIONS

for renovations - all pool types

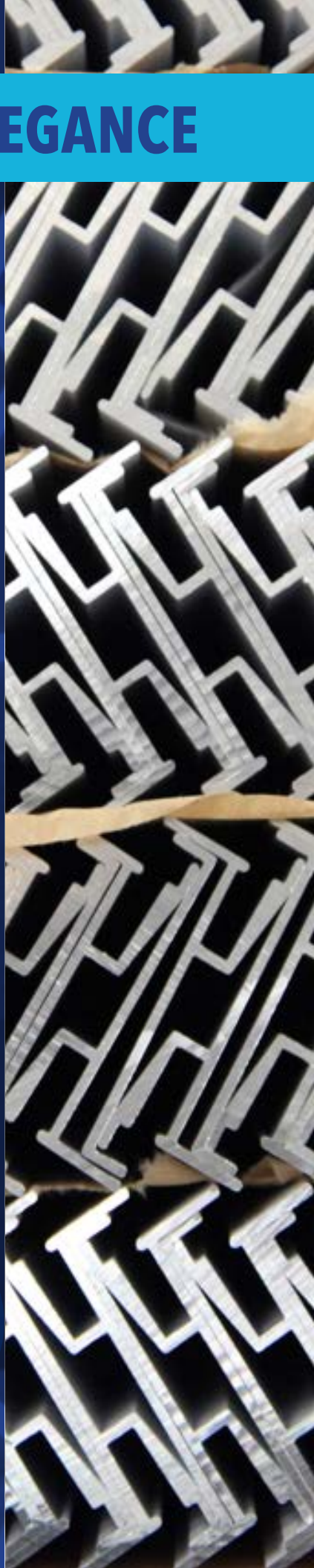

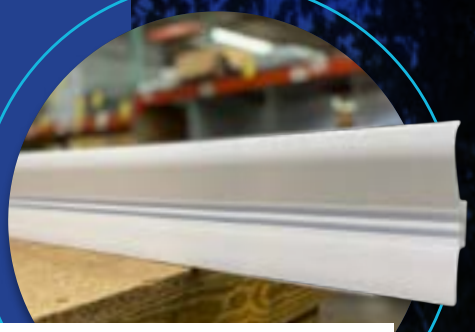

FOXITE II

Fox manufactures Foxite II Coping for excellence in beauty and durability. This coping is used on all Fox 1981- Current pools: Freeforms, Rectangular, and all Garden Pools. It incorporates the exclusive Fox double track design.

QP-0095-15 (white)
Coping, Foxite II
4 piece
10' long
** Includes: **QP-0070-01**, Connector (white)*

QP-0095-17 (white)
Coping, Foxite II
2 piece
10' long
** Includes: **QP-0070-01**, Connector (white)*

CANTILEVER

PVC coping designed for use with Fox pools with poured concrete Cantilever decks.

QP-0780-01 (white)
Coping, Cantilever
9 pieces per case
10' long

QP-0780-07 (white)
Coping, Cantilever
2 piece
10' long

FOXITE II & CANTILEVER MODELS & PART NUMBERS

QP-0095-14 (gray)
Coping, Foxite ll
4 piece
10' long

QP-0095-16 (gray)
Coping, Foxite ll
2 piece
10' long

** Both Include: **QP-0070-04,** Connector (gray)*

GRAY FOXITE II

QP-0780-02 (gray)
Coping, Cantilever
9 pieces per case
10' long

QP-0780-08 (gray)
Coping, Cantilever
2 piece
10' long

GRAY CANTILEVER

WHITE FOXITE II RADIUS

WHITE CANTILEVER RADIUS

GRAY FOXITE II RADIUS

GRAY CANTILEVER RADIUS

COPING OPTIONS - BULLNOSE

PC

PC BULLNOSE COPING	
ITEM NO.	COLOR
PCW	Non-skid white
PCG	Non-skid gray

The PC has a flat bullnose profile and is similar to Pacific style coping.

Straights: 8' and 12' Lengths
Radius: 4', 6', and 8' Lengths

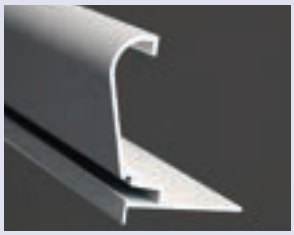

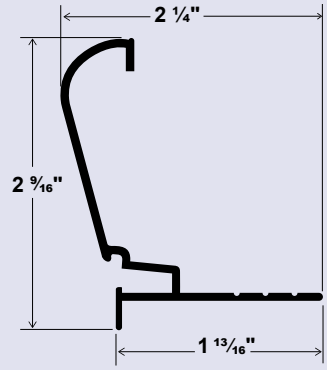

CB

CB BULLNOSE COPING	
ITEM NO.	COLOR
CBW	Non-skid white

The CB coping has 3" profile and is similar in height to the original Heldor style coping.

Straights: 8' and 12' Lengths
Radius: 4', 6', and 8' Lengths

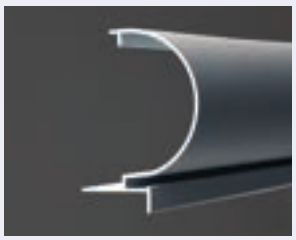

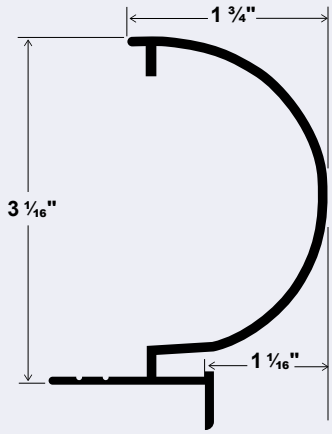

CR

This coping is also referred as "CP2".

CR BULLNOSE COPING	
ITEM NO.	COLOR
CRW	Non-skid white
CRG	Non-skid gray
CRT	Non-skid tan
CRDG	Non-skid dark gray

The CR is designed with a longer lip on the straight pieces, allowing the builder to place TEK screws farther from the liner track.

CRW - Straights: 8' and 12' Lengths
CRG, CRT & CRDG - Straights: 8' Length
All Radius: 4', 6', and 8' Lengths

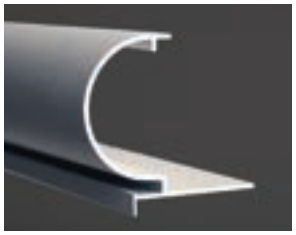

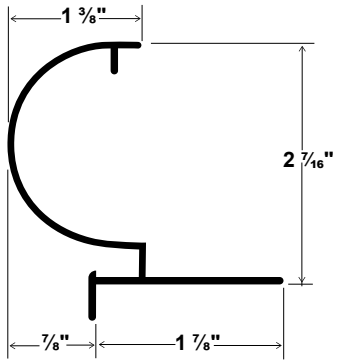

We recommend using a bead roller to help lock liner bead into the liner receiver on all our liner tracks and coping.

CP/C4

CP/C4 BULLNOSE COPING	
ITEM NO.	COLOR
CPW	Non-skid white
C4W	Non-skid white

The CP fits 3 3/4" flange polymer panels. The C4 fits 4" flange polymer panels. CPW is for Polymer Wall pools.

CPW - Straights: 8' and 12' Lengths
C4W - Straights: 12' Lengths

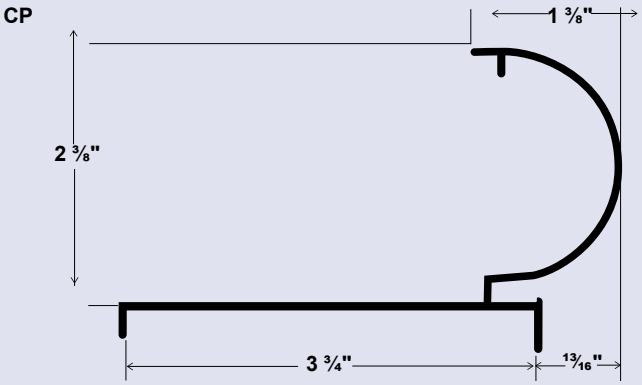

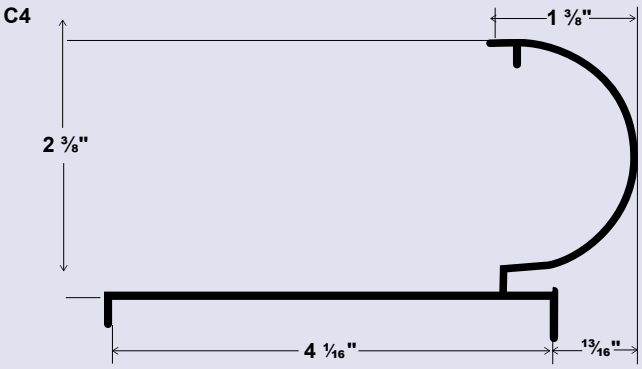

CP and C4 may be combined with the CR coping profiles to build corners and radius curves.

FC

FC BULLNOSE COPING	
ITEM NO.	COLOR
FCW	Non-skid white
FCG	Non-skid gray

The FC is the only Bullnose Coping that can be bent in the field. This will allow for less SKUs
and is available in notched. Clips and tethers support brace are sold separately.

8' Lengths

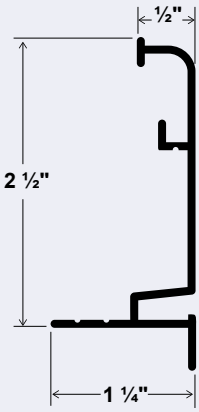

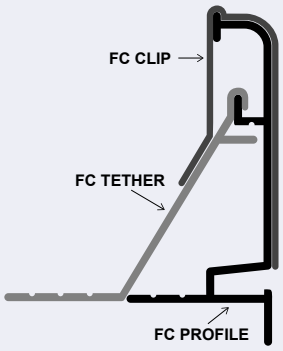

**Tethers are recommended every 2' and at joints.*

Flex coping is not recommended for corners 2' rad or smaller.

TOP MOUNT LINER TRACK

All liner track is made from heavy-duty, aluminum extrusion that is electrostatically coated.

Custom Fabrication: Can be bent to fit any shape, including standard 6”, 2’, or 4’ radius, Grecian corners, and steps. Ask about fabrication for other corner shapes.

Available in 8 ft. lengths only. 15 or 25 per case.

T2

T2 TOP MOUNT TRACK	
ITEM NO.	COLOR
T2W	white
T2G	gray

2" Top Mount Track is used for steel, polymer and concrete wall pools. The T2 is available in notched or straight lengths.

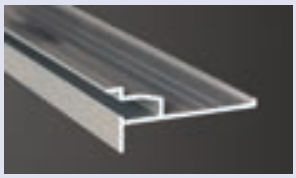

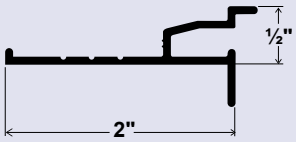

T3

T3 TOP MOUNT TRACK	
ITEM NO.	COLOR
T3W	white

3" Top Mount Track is used for steel, polymer and concrete wall pools. The T3 is available in notched or straight lengths.

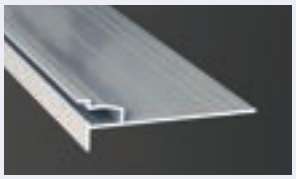

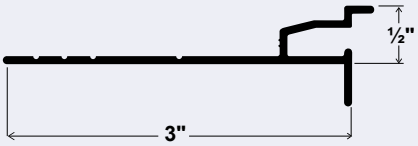

HZ

• HZ TRACK IS THE ONLY TRACK TO USE WITH FOX POOL Z-POOLFORM!

HZ TOP MOUNT TRACK	
ITEM NO.	COLOR
HZW	white
HZG	gray

HZ Top Mount Track is used for steel and polymer wall pools. The HZ is available in notched or rollbent. ***Old and new tracks can be used together.***

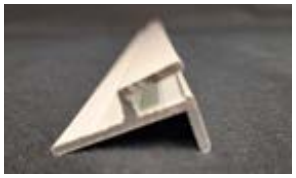

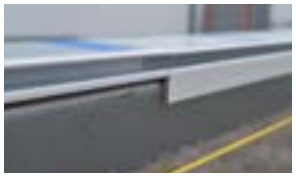

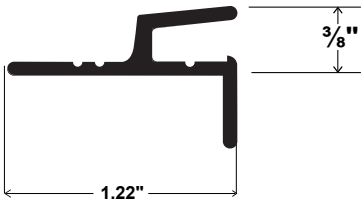

All of our liner tracks are available in standard and custom notched lengths for free-form pools and radius corners.

All liner track is made from heavy-duty, aluminum extrusion that is electrostatically coated. Angled side mount track for reducing gap under old coping. Available in WHITE only.

Available in 8 ft. lengths only. 15 or 25 per case.

AS

AS SIDE MOUNT TRACK	
ITEM NO.	COLOR
ASW	white

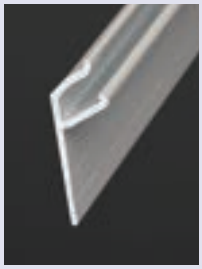

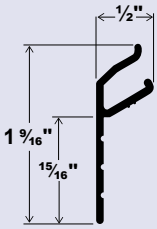

The AS is available in 8' straight, 8' notched and 6" radius notched lengths.
White only. The AS is designed to fit snuggly under old pool coping, eliminating the gap other side mount tracks leave between coping and receiver track.

1.Turned-up lip reduces gap opening under old coping.

2. Includes nail and screw guides.

3. Angled receiver secures liner bead to prevent slipping.

4. Longer length allows more area to attach to wall.

SM

SM SIDE MOUNT TRACK	
ITEM NO.	COLOR
SMW	white

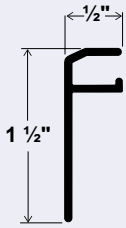

The SM is available in 8' straight, 8' notched and 6" radius notched lengths. White only. For radius and free-form pools,use SM, a notched track that can be bent to conform to almost any radius.

This side mount track has these improved features:

1. Receiver area shortened 1/8” to bring liner closer to pool wall.

2. More screw guides to keep self-drilling screws from wandering when drilling through mounting flange to pool wall.

3. Longer mounting flange for easier attachment to different types of pool wall.

VT

SM SIDE MOUNT TRACK	
ITEM NO.	COLOR
VTW	white

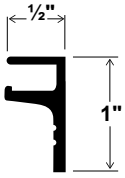

The VT is available in white only. It can be bent to fit any shape, including standard 6", 2' or 4' radius and Grecian corners as well as steps.

The VT can be roll-bent at the factory for almost any shape free-form pool. This profile can also be bent on-site without being notched to fit most radii, down to 2' radius.

CAP LOCK

HC

HC CAP LOCK	
ITEM NO.	COLOR
HCW	white

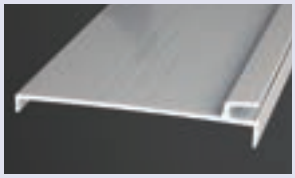

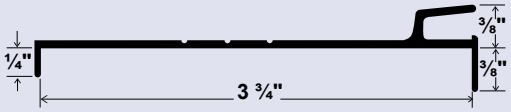

The HC is available in white only and comes in 8' straight lengths in counts of 15 pieces per box. The HZ series can be used with the HC to make corners. HC Cap Lock Liner Track is used for polymer wall pools.

1. Liner bead receiver specially designed to ensure positive lock-in.
2. Screw Guides.
3. Designed to fit any pool with a 3 3/4" wide top flange.
4. Holds polymer pool walls straight.
5. Front and rear flanges to lock on pool wall.

T4

T4 CAP LOCK	
ITEM NO.	COLOR
T4W	white

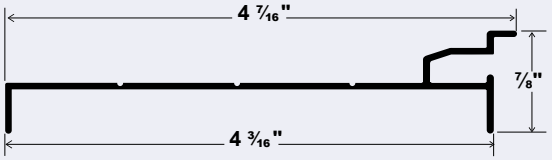

The T4 is available in white only and comes in 12' straight lengths in counts of ten pieces per box. The T2 notched can be used with the T4 to make corners. T4 Cap Lock Liner Track is used for polymer wall pools.

1. Liner bead receiver specially designed to ensure positive lock-in.
2. Screw Guides.
3. Designed to fit any pool with a 4" wide top flange.
4. Holds polymer pool walls straight.
5. Front and rear flanges to lock on pool wall.

DOUBLE TRACK

DT

DT DOUBLE TRACK	
ITEM NO.	COLOR
DTW	white
DTG	gray

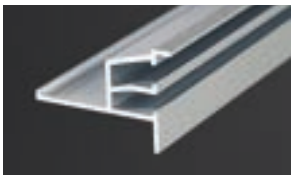

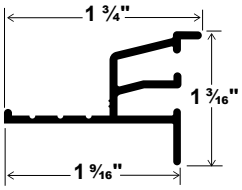

The DT is available in white or gray and comes in 8' straight or notched lengths in counts of 15 pieces per box.

SNAP STRIP COPING

SS

SNAP STRIP COPING	
ITEM NO.	COLOR
SSW	Non-skid white/white inserts
SSB	Non-skid white/blue inserts

The SS comes in 12' and 16' straight lengths in counts of 1 or 2 pieces. The SS comes in standard configurations for most rectangular pools including an 18" diagonal, 6" radius, 90°, and 135° Grecian corners. Other sizes can be cut and welded to fit many curves, including reverse 6" radius, 270°, 4' corners, and full radius ends for oval pools. The SS (Snap Strip Coping) is an ideal coping for pool renovations.

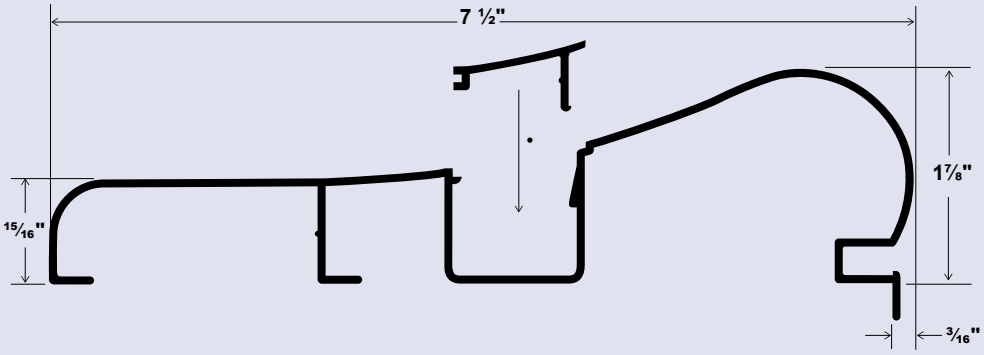

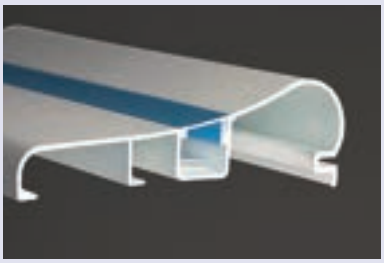

Shown with blue insert

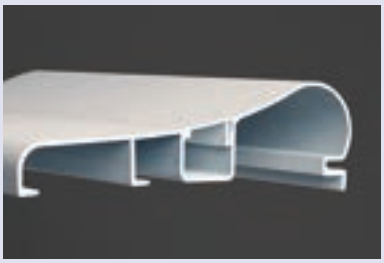

Shown with white insert

WOOD RECEIVER COPING

CG

CG WOOD RECEIVER COPING	
ITEM NO.	COLOR
CGW	Non-skid white

The CG comes in 12' straight lengths in counts of 6 pieces. The CG is designed to receive standard 1 1/4" (5/4" board) decking and is popular for on-ground pools or pools surrounded by wooden decks. Cut and welded corners only.

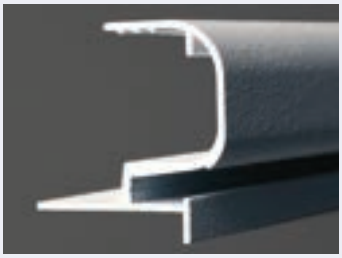

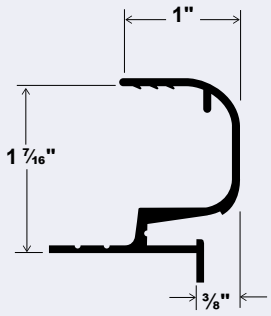

Lengths can be cut for UPS shipping.

CONCRETE LINER TRACK

CC

CC LINER TRACK	
ITEM NO.	COLOR
CCW	white

The CC is available in white only and comes in 8' straight lengths, 15 pieces per case. Used for concrete step applications.

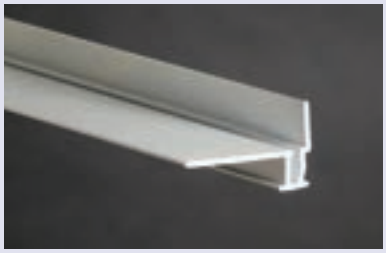

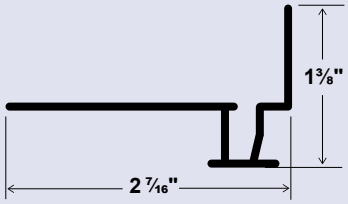

STONE COPING SUPPORT SYSTEM

**** not recommended for Polymer Pools***

STONE COPING SUPPORT SYSTEM COMPONENTS		
ITEM NO.	PART NUMBER	DESCRIPTION
1	CS748EXR	4' Radius Coping Support Shelf
2	CS748EX	4' Straight Coping Support Shelf
3	CS772EX	6' Straight Coping Support Shelf
4	CS796EX	8' Straight Coping Support Shelf
5	CS748CL	Vertical Coping Support - 48" high
6	CS710CL	Vertical Coping Support - 42" high
7	CS710CS	Horizontal Coping Support - Steel
8	CS710CSP*	Horizontal Coping Support - Plastic Step
9	BPS30DB	Versa Brace Bolt Pack (Qty. to do 30 braces)
10	BP000TS	#12 x 1 Hex Tek Screws - 110/Box

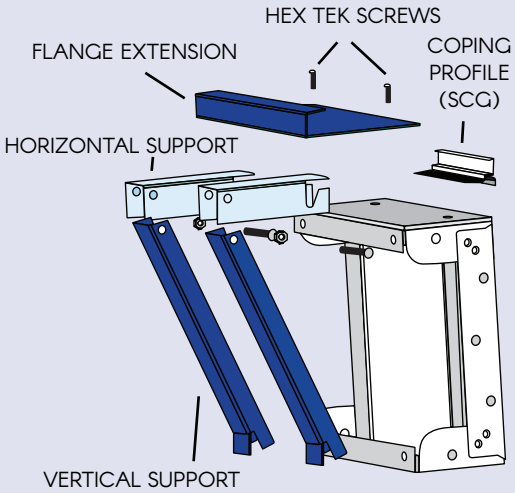

Special features of Fox Pool's Stone Coping Support System:

- Manufactured of 14 gauge galvanized steel and can be used on all Fox Pool steel pool kits.
- Provides 10" wide base for attachment of stone coping or pavers.
- Weight of coping stones is supported by a channel that is locked into collar.
- Use a pea gravel or small aggregate mix to make finishing easier.
- Eliminates excavation for second bond beam as well as additional concrete deliveries.

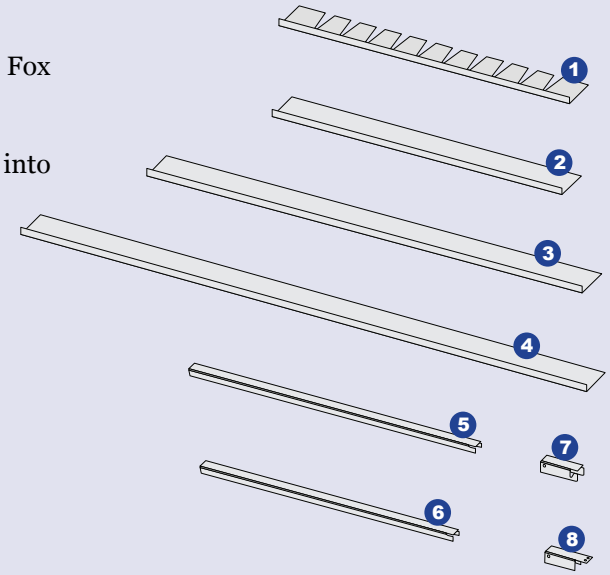

STONE COPING LINER TRACK

SC

CG WOOD RECEIVER COPING	
ITEM NO.	COLOR
SCG	Non-skid gray

The SC comes in 8' straight lengths sold by the piece. The SC is a top mount liner track for Fox Pool's stone coping support system and can be notched for custom bending on site. CS710CSP only used for thermo stairs.

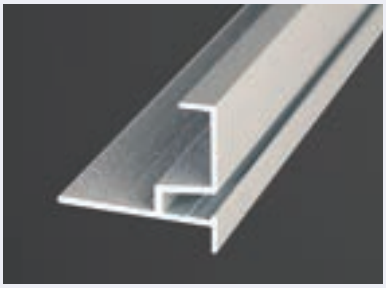

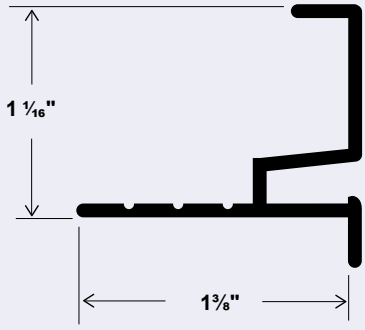

WHITE COPING TAPE

WHITE COPING TAPE	
ITEM NO.	DESCRIPTION
VT1500	1 Roll = 2" x 60 yds.

Use to tape off edge of aluminum coping to protect coping from concrete being scratched during screening. Tape comes off without leaving any gummy residue.

VINYL TRIM SEAL

VINYL TRIM SEAL	
ITEM NO.	DESCRIPTION
TS1-120W	White, One 120' Roll
TS1-120G	Gray, One 120' Roll

The TS1 Trim Seal will seal off the top track of the DT Double Top Mount Liner Track after it has been used to lock cantilever deck forms in place during pool constructions.

**Picture is shown using Trim Seal in conjunction with step liner track.*

PAL REPLACEMENT CLIPS

PAL REPLACEMENT CLIPS	
ITEM NO.	DESCRIPTION
PALSTR	1 ½" x 9" For Straight Coping Joints
PALCRN	1 ½" x 10" For Corner Coping Joints

ZINC TEK SCREWS

ZINC TEK SCREWS	
ITEM NO.	DESCRIPTION
BP000TS	110 #12 - 1" Tek Screws

NON-SKID TOUCH-UP PAINT

NON-SKID TOUCH-UP PAINT	
ITEM NO.	DESCRIPTION
CRW-NONSKID	12 Oz. Spray Can Texture White Covers 8-10 Sq Ft
CRG-NONSKID	12 Oz. Spray Can Texture Gray Covers 8-10 Sq Ft
CRDG-NONSKID	12 Oz. Spray Can Texture Dark Gray Covers 8-10 Sq Ft
CRT-NONSKID	12 Oz. Spray Can Texture Tan Covers 8-10 Sq Ft
CRW-QUART	1 Qt. Touch-Up Texture White Covers 50 Sq Ft

COPING CORNER LENGTHS INSTALLATION

Shown below are corner lengths and dimensions.

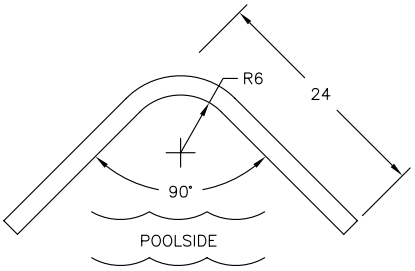

6" RADIUS CORNER

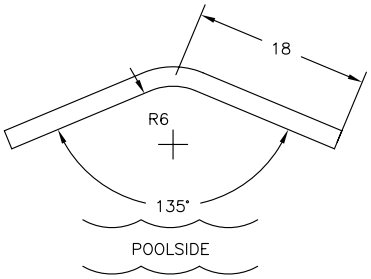

GRECIAN CR W/18" LEG

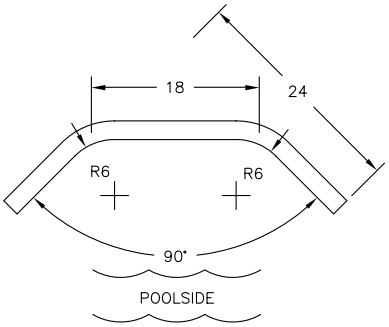

18" DIAG. CORNER

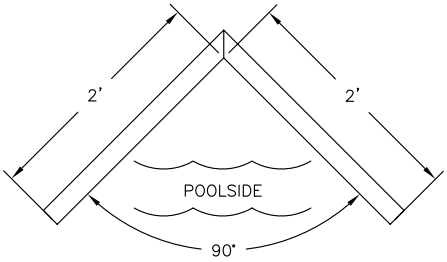

2' x 2' x 90° O/S CR CORNERS

SNAP STRIP COPING

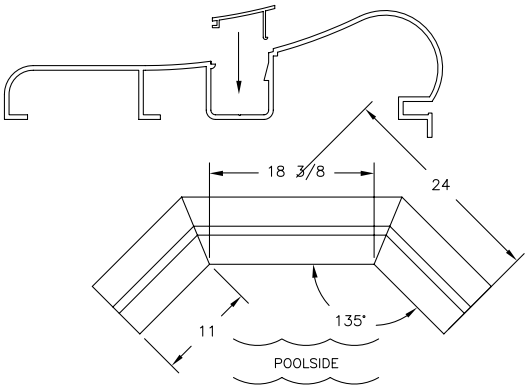

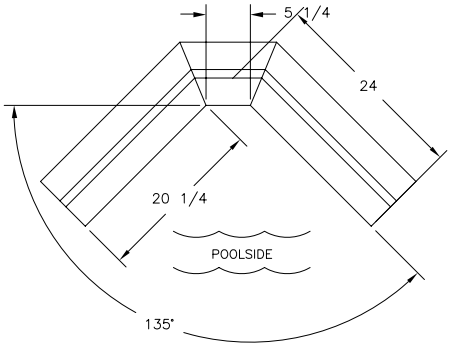

COLOR GUIDE

NON-SKID WHITE

NON-SKID GRAY

NON-SKID TAN

NON-SKID DARK GRAY

The color representations have been printed as closely as possible to actual colors, however, product color may vary from photograph.

THERMOPLASTIC STEPS

Our thermoplastic stairs are flexible, strong, and built to withstand the elements. Not only is the strength built into the stair itself; every stair has a support system that is also set in concrete. The stairs are vacuum-formed from a single piece of ABS. Many shapes and styles are available in our Quaker Step Line, including contour, cantilever, in-wall ladder, leisure bench, and corner. All steps are white, with select models available in solid gray.

All steps are white with select models available in solid gray.

Quaker Plastics

WHITE MODELS
GRAY MODELS
PARTS KIT
GOODIE BAG

IN-POOL STAIRS WHITE

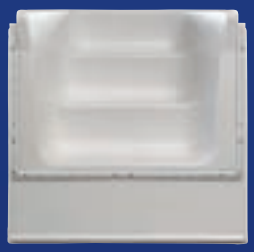

QP-0004S
4' 3-tread Straight

QP-0064S
6' 4-tread Straight

QP-0064SC
6' 4-tread Straight Cantilever

QP-0064R
6' 4-tread Radius

QP-0084TS
8' 4-tread Twin Seat/Step Straight

QP-0084TSR
8' 4-tread Twin Seat/Step Radius

QP-0084TSC
8' 4-tread Twin Seat/Step Straight Cantilever

ALSO AVAILABLE:

QP-0064RC
6 ft. 4-tread Radius Cantilever

QP-0085TR
8 ft. 5-tread Twin Seat/Step Radius 48" High

QP-0085TRC
8 ft. 5-tread Twin Seat/Step Radius Cantilever 48" High

QP-0085TSC
8 ft. 5-tread Twin Seat/Step Straight Cantilever 48" High

QP-4063C48
90 Degree 3-tread Corner Twin Seat/Step Cantilever 48" High

QP-4063C42
6' 3-tread 90° Corner
Twin Seat/Step Cantilever

QP-0084TRC
8' 4-tread Twin Seat/Step Radius Cantilever

QP-1000NR
In-pool Ladder, Without Rails

QP-0006IWS
6' In-wall Seat

QP-0085TS
8' 5-tread Twin Seat/Step
Straight, 48" Wall Height

The color representations have been printed as closely as possible to actual colors, however, actual stair color may vary from photograph.

Please call Customer Service for additional information.

CONTROLLED FLEXIBILITY

All-plastic channels are permanently bonded to the underside of each tread, providing controlled flexibility. These patented, heavy-duty, extra-wide channels mean optimum strength while still allowing the stairs enough flexibility to withstand freezing and thawing.

LOCK DOWN BLEACHER SYSTEM

FAST • EASY • SIMPLE

The entire Lock Down Bleacher System™ is preassembled at the factory so there are no lost nuts or bolts. Stair support posts simply snap down and lock into place.

The molded bottom shoes easily flip to the horizontal position and the stair is ready for installation. Precision-engineered leveling support posts and bottom shoes are permanently hinged at the factory to the Ridg-A-Dized support channel, strategically located under each tread.

Leveling and support posts, along with the support shoes, are pre-drill for rebars. Install rebar through holes, cover with concrete, and stair is ready for final leveling before concrete hardens. No blocks, no nuts or bolts, no make-shift leveling/support methods, no costly labor or materials.

Result: Level stairs with bleacher-type stability, strength, and support.

IN-POOL STAIRS

GRAY

QP-0084TSCG
8’ 4-tread Twin Seat/Step Straight Cantilever

QP-4063C42G
6’ 3-tread 90° Corner Twin Seat/Step Cantilever

QP-0064SCG
6’ 4-tread Straight Cantilever

QP-0084TRCG
8’ 4-tread Twin Seat/Step
Radius Cantilever

QP-1000NRG
In-pool Ladder, Without Rails

Photographs may not be representative of color. Actual stair color may vary from photograph.

NEUTRAL POOL TRENDS

Trending nationwide, the use of muted grays and neutral colors as an additional option to the classic white Thermoplastic Steps seems to be a growing desire aesthetically for Homeowners.

Our Solid Gray color option will match well with our solid gray coping, liner bead, darker liner patterns, and additional features offered by Fox Pool to complete a pool with a sleek design.

THE BENEFITS

- *Resistance to fading*
  (better UV protection in the mold makeup to hold up against years of sun exposure.)
- *Simple maintenance/repair*
  (steps are repaired quickly without losing appearance or color.)
- *Material used can be recycled and reused in new models for a more environmentally friendly product*
- *Stronger bonds during forming*
- *TLC Corners*
  (hole prevention during liner installation.)

THERMOPLASTIC STAIR PARTS KIT

THERMOPLASTIC STAIR PARTS KIT

STAIR PARTS KIT	
ITEM NO.	DESCRIPTION
H3-6037	Stair Mount Caps (White)
H3-6072	Stair Mount Caps (Gray)
QG-6623-18	18 ft. Trim Cover w/ 2 Corner Pieces (White)
QG-6623G18	18 ft. Trim Cover w/ 2 Corner Pieces (Gray)
Part # Varies	Side Gaskets
Part # Varies	Bottom Gasket
Part # Varies	Bottom Faceplate
Part # Varies	Side Faceplates

*Example below is our 8ft. 4-tread Twin Seat/ Step Straight (PK-84). Other step kits are available.**

TLC® TOTAL LINER CARE

Our patented radius corner stair mount face plate is rounded at each bottom corner, connecting with the side face plates for a truly professional look. Smooth corners mean no sharp edges inside the pool, eliminating a possible hazard during liner installation and providing added protection for pool users. When a liner replacement is necessary, face plate screws are easily removed.

PRECISION GROOVED FACEPLATE

The back of the smooth, radius corner Stair Mount Face has been designed with ridges and grooves to ensure a leak-tight seal between the stair gasket and liner. This engineered, leak-tight system has been proven in over 250,000 installations.

COLOR MATCHED PRE-PUNCHED GASKET

Our gasket blends with the stair and liner edge for a beautiful, color matched installation. The pre-punched gasket means an easier, quicker installation and assures that no gasket material will be wedged into the screw hole and cause leakage for a beautiful, color matched installation.

IMPROVED TRIM STRIP

The trim strip, used to conceal the screws, is made from color matched, flexible plastic material. It can be easily pressed into the holding track and easily removed.

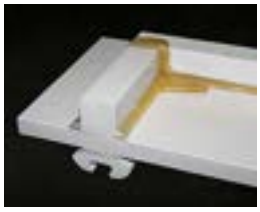

PERMANENT DEADEND BLOCK

The Quaker Stair easily adapts to all swimming pools. Our unique Deadend Block design helps assure watertight installation. A permanent, solid plastic Deadend Block is securely bonded at the factory. This block totally encapsulates all screws, assuring a non-leak installation.

NEW FOR 2026!

NEW UNIVERSAL FACEPLATE

Our Universal Faceplate seals the liner to the face of the Thermoplastic Step.

The universal kit can be cut and mounted to a variety of shapes of steps. The kit includes the faceplate track, gasket and seal.

PK-UNIV
Universal Faceplate

GOODIE BAG

GOODIE BAG	
ITEM NO.	DESCRIPTION
QG-60194	15/16" #10 Stainless Steel Screws - Qty. 50 w/ Stair Mount Caps (W,H3-6037) or (G,H3-6072) - Qty. 2
QG-6623-18	18 ft. Trim Cover, 2 Corner Pieces (White)
QG-6623G18	18 ft. Trim Cover, 2 Corner Pieces (Gray)

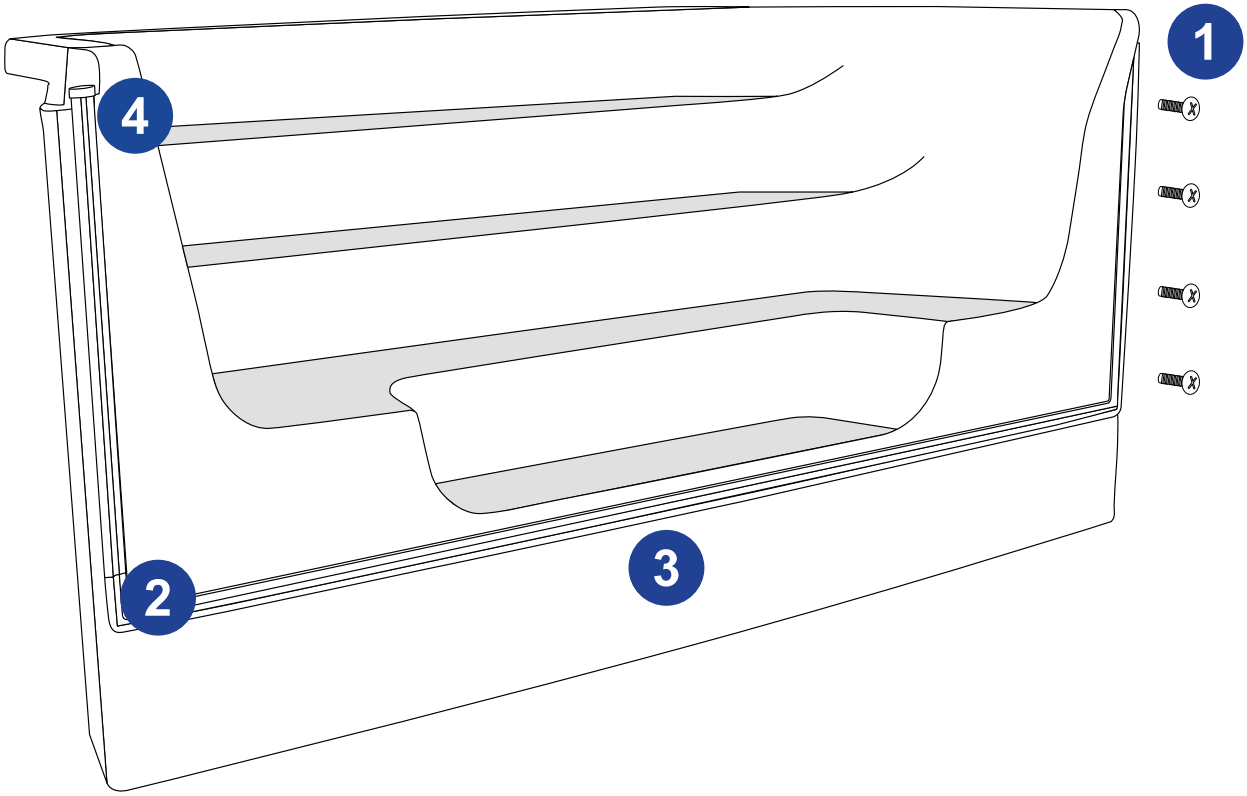

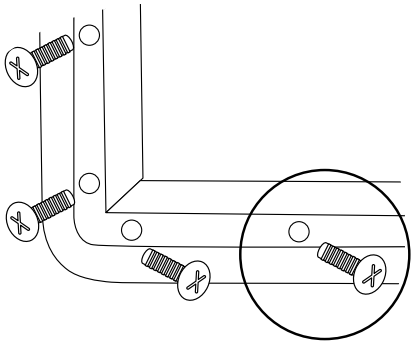

1. STAINLESS STEEL SCREWS

Used to attach faceplates to the steps.

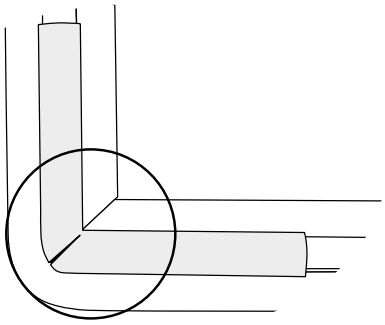

2. TRIM COVER CORNER PIECES

Fits into corners of the holding track on the faceplate. One for each corner.

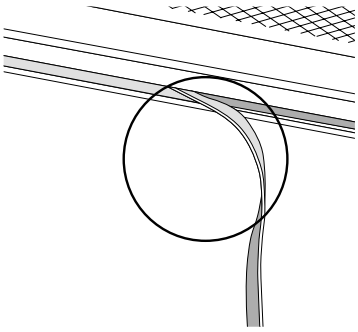

3. TRIM COVER

Fits into holding track of the faceplate to conceal screws.

4. STAIR MOUNT CAPS

Fits on top of the faceplate. One for each side of the step.

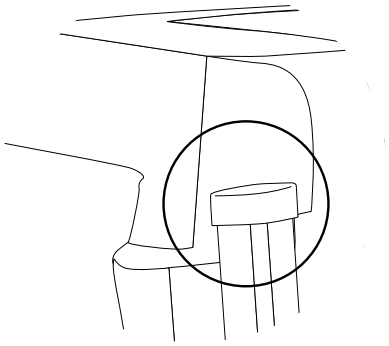

FOX POOL LUXURY SPAS:
POOLMATE & WATERFALL

ESCAPE AWAY TO YOUR BACKYARD for a truly relaxing experience in a Fox Pool Luxury Spa. Made with precision and the highest quality product coupled with state-of-the-art features, a spa addition can provide endless rejuvenation all year long. Our Standard and Spill-Over options allow you to choose the function and movement of your outdoor living space. Available in two sleek color variations, a Fox Spa is simply an extension of elegance to any pool.

SIT & *stay awhile*

Our Luxury Spas provide a space to relax and unwind all year long. With features like stainless steel jets, built-in filtration system, adjustable air control, easy-entry steps and more, your spa will not only function properly, but guarantee a truly tranquil and calming experience for any occasion.

POOLMATE:

W17-PMR12SS
Spa Round 12 Jet, Sterling Silver

W17-PMS12SS
Spa Square 12 Jet, Sterling Silver

W17-PMS25SS
Spa Square 25 Jet, Sterling Silver

W17-PMR12SC
Spa Round 12 Jet, Storm Cloud

W17-PMR25SC
Spa Round 25 Jet, Storm Cloud

W17-PMS25SC
Spa Square 25 Jet, Storm Cloud

WATERFALL (SPILLOVER FUNCTION):

W17-WFR12SS
Spa Spillover Round 12 Jet, Sterling Silver

W17-WFS12SS
Spa Spillover Square 12 Jet, Sterling Silver

W17-WFS25SS
Spa Spillover Square 25 Jet, Sterling Silver

W17-WFR12SC
Spa Spillover Round 12 Jet, Storm Cloud

W17-WFR25SC
Spa Spillover Round 25 Jet, Storm Cloud

W17-WFS25SC
Spa Spillover Square 25 Jet, Storm Cloud

W17-PMR25SS
Poolmate Spa- Round
25 Jet, Sterling Silver

W17-WFR25SS
Waterfall Spa- Round
25 Jet, Sterling Silver

W17-PMS12SC
Poolmate Spa- Square
12 Jet, Storm Cloud

W17-WFS12SC
Waterfall Spa- Square
12 Jet, Storm Cloud

The color representations have been printed as closely as possible to actual colors, however, actual spa shell colors may vary from photograph.

SPA FEATURES

Fox Pool Luxury Spas are manufactured to the highest quality standards, while state-of-the-art features give you the ultimate experience in relaxation. All Spas are pre-plumbed and water tested to ensure a leak-free installation.

	ROUND 12 JET	ROUND 25 JET	SQUARE 12 JET	SQUARE 25 JET
Easy Entry Steps	•	•	•	•
Hydrotherapy Stainless Steel Jets	•	•	•	•
Colors	**STERLING SILVER OR STORM CLOUD**			
Interior Embossed Wave Detail	•	•	•	•
Adjustable Air Control	•	•	•	•
360-Degree Vortex Skimmer	•	•	•	•
Built-in Filtration	•	•	•	•
Reusable 50 sq.ft. Cartridge Filter	•	•	•	•
Diverter Valve for Whirlpool Action		•		
Dimensions	85" Round 34" Deep	85" Round 34" Deep	84" Square 34" Deep	84" Square 34" Deep

BUILT-IN FILTRATION

Luxury Spas feature a built in 360–degree vortex skimmer with reusable cartridge filter.

HYDROTHERAPY

Luxury Spas offer a special grouping of high-powered hydrotherapy jets. These fully adjustable stainless-steel jets offer

the finest relaxation and revitalization experience by targeting the entire back and shoulder region.

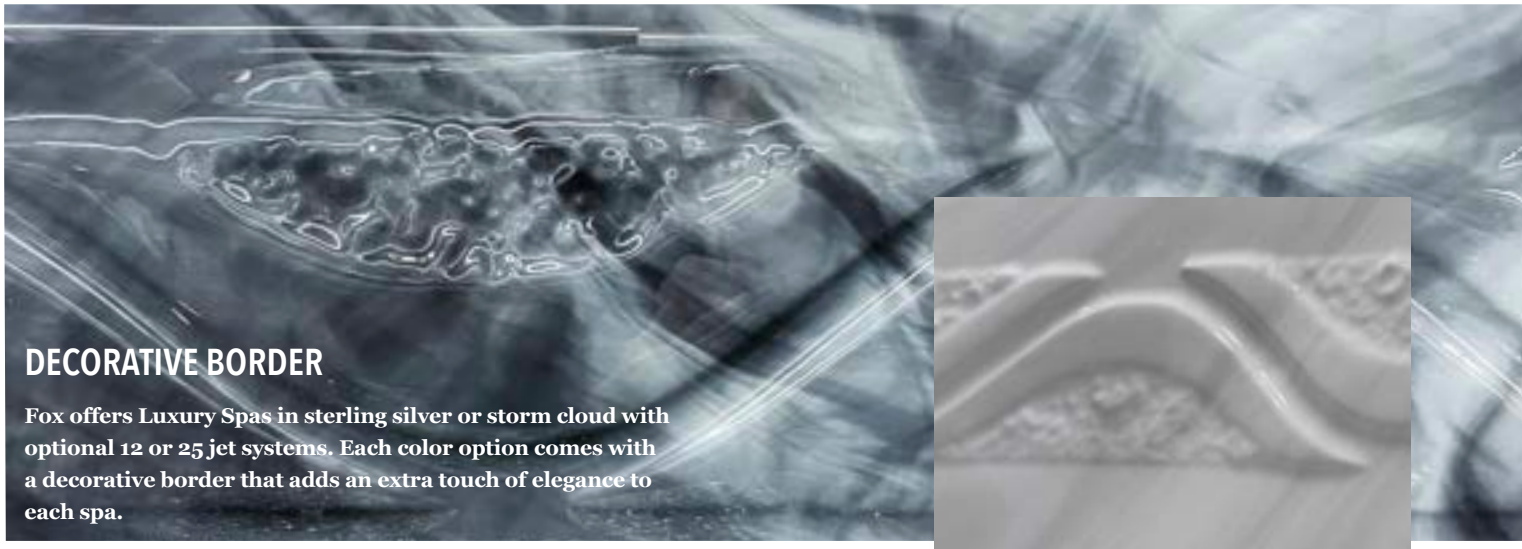

DECORATIVE BORDER

Fox offers Luxury Spas in sterling silver or storm cloud with optional 12 or 25 jet systems. Each color option comes with a decorative border that adds an extra touch of elegance to each spa.

Fox Pool Luxury Spas do not meet commercial installation code.

STYROFOAM COPING FORMS

Modern Moulding, in partnership with Fox Pool, is a leading manufacturer of cantilever coping styrofoam forms. The innovative system designed by Modern Moulding can cut hours off installation and cleanup time. With one of our offered coping kits, a standard pool can be set up and ready to pour in as little as one hour. Versatility is provided with a variety of profile designs, as well as installation capabilities for vinyl, fiberglass, and concrete/gunite pools.

BENEFITS:

- Forms wedge directly into liner track, leaving track clean of debris
- No two-way tape required
- Easy to install/replace
- Can combine the forms onto existing Fox Pool and Quaker shipments at no additional cost
- This system uses reusable lock-in clips to hold the forms in place. These clips have an extended support to keep the forms from tilting when concrete is poured

MODERN MOULDING

COPING PROFILES

- *VINYL LINER POOLS*
- *FIBERGLASS POOLS*
- *CONCRETE/GUNITE POOLS*
- *AUTO COVERS*

CORNERS,CLIPS & ACCESSORIES

COPING PROFILES FOR VINYL LINER POOLS *AVAILABLE IN 112'/BOX OR 32'/BOX

PART NUMBER	DESCRIPTION	EXTENDED DESCRIPTION
FX-NC	8' CAPSTONE VINYL LINER - 14/BX	8' x 14pcs - 112 Linear FT/Box
FX-NC-32	8' CAPSTONE VINYL LINER - 4/BX	8' x 4pcs - 32 Linear FT/Box
FX-SQP	8' SQUARE VINYL LINER - 14/BX	8' x 14pcs - 112 Linear FT/Box
FX-SQP-32	8' SQUARE VINYL LINER - 4/BX	8' x 4pcs - 32 Linear FT/Box
FX-BN	8' BULLNOSE VINYL LINER - 14/BX	8' x 14pcs - 112 Linear FT/Box
FX-BN-32	8' BULLNOSE VINYL LINER - 4/BX	8' x 4pcs - 32 Linear FT/Box
FX-CRC	8' SHORT VINYL LINER - 14/BX	8' x 14 pcs - 112 Linear FT/Box
FX-CRC-32	8' SHORT VINYL LINER - 4/BX	8' x 4pcs - 32 Linear FT/Box
FX-ICC	8' REGULAR V LINER - 14/BX	8' x 14 pcs - 112 Linear FT/Box
FX-ICC-32	8' REGULAR V LINER - 4/BX	8' x 4pcs - 32 Linear FT/Box
FX-LIVEEDGE225	2.25" High x 8' LIVE EDGE VINYL LINER-14/BX +1 roll of DBL sided tape	8' x 14pcs - 112 Linear FT/Box
FX-LIVEEDGE3	3" High x 8' LIVE EDGE VINYL LINER-14/BX + 1 roll of DBL sided tape	8' x 14pcs - 112 Linear FT/Box

FX-NC

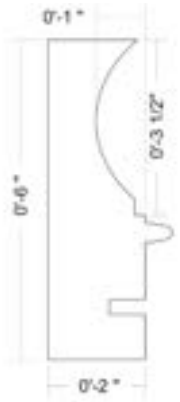

FX-BN

FX-ICC

FX-CRC

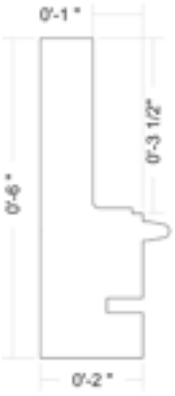

FX-SQP

FX-LIVEEDGE3

FX-LIVEEDGE225

COPING PROFILES FOR FIBERGLASS POOLS *AVAILABLE IN 112'/BOX OR 32'/BOX

PART NUMBER	DESCRIPTION	#FX-CC-UD CLIPS INCLUDED	EXTENDED DESCRIPTION
FX-NC-FG	8' CAPSTONE FIBERGLASS - 14/BX	100	8' x 14pcs - 112 Linear FT/Box
FX-NC-FG-32	8' CAPSTONE FIBERGLASS - 4/BX	40	8' x 4pcs - 32 Linear FT/Box
FX-SQP-FG	8' SQUARE FIBERGLASS - 14/BX	100	8' x 14pcs - 112 Linear FT/Box
FX-SQP-FG-32	8' SQUARE FIBERGLASS - 4/BX	40	8' x 4pcs - 32 Linear FT/Box
FX-BN-FG	8' BULLNOSE FIBERGLASS - 14/BX	100	8' x 14pcs - 112 Linear FT/Box
FX-BN-FG-32	8' BULLNOSE FIBERGLASS - 4/BX	40	8' x 4pcs - 32 Linear FT/Box
FX-CRC-FG	8' SHORT FIBERGLASS - 14/BX	100	8' x 14pcs - 112 Linear FT/Box
FX-CRC-FG-32	8' SHORT FIBERGLASS - 4/BX	40	8' x 4pcs - 32 Linear FT/Box
FX-ICC-FG	8' REGULAR FIBERGLASS - 14/BX	100	8' x 14pcs - 112 Linear FT/Box
FX-ICC-FG-32	8' REGULAR FIBERGLASS - 4/BX	40	8' x 4pcs - 32 Linear FT/Box
FX-LIVEEDGE225FG	2.25" High x 8' LIVE EDGE FIBERGLASS-14/BX + 1 roll of DBL sided tape	100	8' x 14pcs - 112 Linear FT/Box
FX-LIVEEDGE3FG	3" High x 8' LIVE EDGE FIBERGLASS-14/BX + 1 roll of DBL sided tape	100	8' x 14pcs - 112 Linear FT/Box

FX-NC-FG

FX-BN-FG

FX-ICC-FG

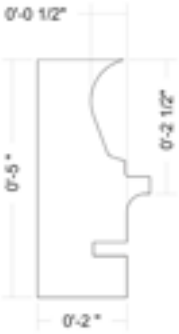

FX-CRC-FG

FX-SQP-FG

FX-LIVEEDGE3FG

FX-LIVEEDGE225FG

COPING PROFILES FOR CONCRETE/GUNITE POOLS *AVAILABLE IN 112'/BOX OR 32'/BOX

PART NUMBER	DESCRIPTION	#FX-CC-UD CLIPS INCLUDED	EXTENDED DESCRIPTION
FX-NC-FGWT	8' CAPSTONE CONCRETE W/TILE - 14/BX	100	8' x 14pcs - 112 Linear FT/Box
FX-NC-FGWT-32	8' CAPSTONE CONCRETE W/TILE - 4/BX	40	8' x 4pcs - 32 Linear FT/Box
FX-SQP-FGWT	8' SQUARE CONCRETE W/TILE - 14/BX	100	8' x 14pcs - 112 Linear FT/Box
FX-SQP-FGWT-32	8' SQUARE CONCRETE W/TILE - 4/BX	40	8' x 4pcs - 32 Linear FT/Box
FX-BN-FGWT	8' BULLNOSE CONCRETE W/TILE - 4/BX	100	8' x 14pcs - 112 Linear FT/Box
FX-BN-FGWT-32	8' BULLNOSE CONCRETE W/TILE - 4/BX	40	8' x 4pcs - 32 Linear FT/Box
FX-CRC-FGWT	8' SHORT PROFILE CONCRETE - 14/BX	100	8' x 14pcs - 112 Linear FT/Box
FX-CRC-FGWT-32	8' SHORT PROFILE CONCRETE - 4/BX	40	8' x 4pcs - 32 Linear FT/Box
FX-ICC-FGWT	8' REGULAR PROFILE CONCRETE/GUNITE - 14/BX	100	8' x 14pcs - 112 Linear FT/Box
FX-ICC-FGWT32	8' REGULAR PROFILE CONCRETE/GUNITE - 4/BX	40	8' x 4pcs - 32 Linear FT/Box
FX-LIVEEDGE2FGWT	2.25" High x 8' LIVE EDGE CONCRETE W/TILE-14/BX + 1 roll of DBL sided tape	100	8' x 14pcs - 112 Linear FT/Box
FX-LIVEEDGE3FGWT	3" High x 8' LIVE EDGE CONCRETE W/TILE -14/BX + 1 roll of DBL sided tape	100	8' x 14pcs - 112 Linear FT/Box

FX-NC-FGWT

FX-BN-FGWT

FX-ICC-FGWT

FX-CRC-FGWT

FX-SQP-FGWT

FX-LIVEEDGE3FGWT

FX-LIVEEDGE225FGWT

COPING PROFILES FOR AQUAMATIC COVER SYSTEMS *AVAILABLE IN 112'/BOX

PART NUMBER	DESCRIPTION	EXTENDED DESCRIPTION
FX-NCAQUACOVER	8' BULLNOSE AQUAMATIC COVER SYSTEMS-14/BX	8' x 14pcs-112 Linear FT/Box
FX-BNAQUACOVER	8' CAPSTONE AQUAMATIC COVER SYSTEMS-14/BX	8' x 14pcs-112 Linear FT/Box
FX-SQPAQUACOVER	8' SQUARE AQUAMATIC COVER SYSTEMS-14/BX	8' x 14pcs-112 Linear FT/Box
FX-LIVEEDGEAQUA	8' LIVE EDGE AQUAMTIC COVER SYSTEMS-14/BX+1 roll of DBL sided tape	8' x 14pcs-112 Linear FT/Box

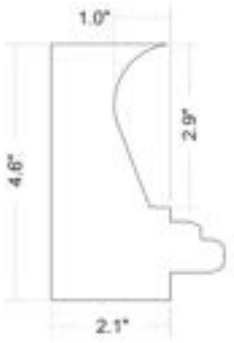

FX-NCAQUACOVER

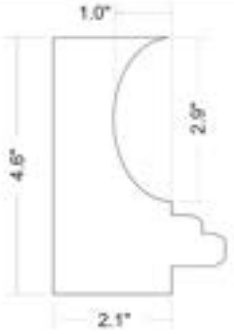

FX-BNAQUACOVER

FX-SQPAQUACOVER

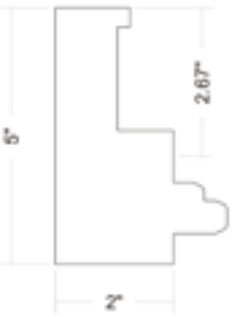

FX-LIVEEDGEAQUA

COPING PROFILES FOR AUTOMATIC POOL COVERS *AVAILABLE IN 112'/BOX

PART NUMBER	DESCRIPTION	EXTENDED DESCRIPTION
FX-NC-APC	8' CAPSTONE AUTOMATIC POOL COVERS -14/BX	8' x 14pcs - 112 Linear FT/Box
FX-BN-APC	8' BULLNOSE AUTOMATIC POOL COVERS-14/BX	8' x 14pcs - 112 Linear FT/Box
FX-SQP-APC	8' SQUARE AUTOMATIC POOL COVERS-14/BX	8' x 14pcs - 112 Linear FT/Box
FX-LIVEEDGE2APC	8' LIVE EDGE 2.25" High AUTOMATIC POOL COVERS-14/BX + 1 roll of DBL sided tape	8' x 14pcs - 112 Linear FT/Box

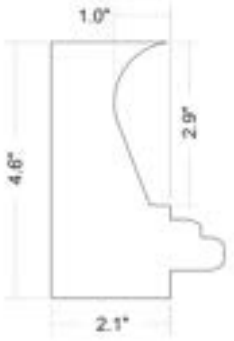

FX-NCAQUACOVER

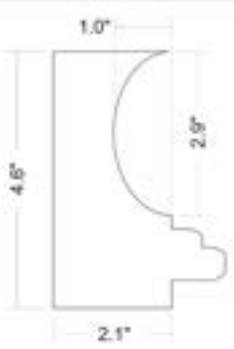

FX-BNAQUACOVER

FX-SQPAQUACOVER

FX-LIVEEDGEAQUA

COPING PROFILES FOR COVER POOLS *AVAILABLE IN 122'/BOX

PART NUMBER	DESCRIPTION	EXTENDED DESCRIPTION
FX-NCCOVERPOOLT3	8' CAPSTONE COVER POOLS-14/BX	8' x 14pcs - 112 Linear FT/Box
FX-NCCOVERPOOLT4	8' CAPSTONE COVER POOLS-14/BX	8' x 14pcs - 112 Linear FT/Box
FX-BNCOVERPOOLT4	8' BULLNOSE COVER POOLS-14/BX	8' x 14pcs - 112 Linear FT/Box
FX-SQPCVERPOOLT3	8' SQUARE COVER POOLS-14/BX	8' x 14pcs - 112 Linear FT/Box
FX-SQPCVERPOOLT4	8' SQUARE COVER POOLS-14/BX	8' x 14pcs - 112 Linear FT/Box
FX-LIVEEDGE225CP	8' LIVE EDGE COVER POOLS-14/BX+1 roll of DBL sided tape	8' x 14pcs - 112 Linear FT/Box

FX-NCCOVERPOOLT3

FX-NCCOVERPOOLT4

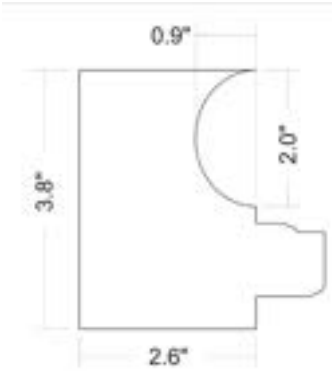

FX-BNCOVERPOOLT4

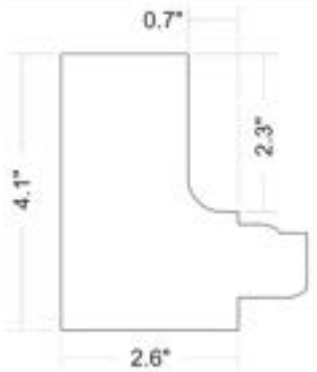

FX-SQPCVERPOOLT3

FX-SQPCVERPOOLT4

FX-LIVEEDGE225CP

COPING PROFILES FOR COVERSTAR *AVAILABLE IN 112'/BOX

PART NUMBER	DESCRIPTION	EXTENDED DESCRIPTION
FX-NC-COVERSTAR	8' CAPSTONE COVERSTAR-14/BX	8' x 14pcs - 112 Linear FT/Box
FX-BN-COVERSTAR	8' BULLNOSE COVERSTAR-14/BX	8' x 14pcs - 112 Linear FT/Box
FX-SQP-COVERSTAR	8' SQUARE COVERSTAR-14/BX	8' x 14pcs - 112 Linear FT/Box
FX-LIVEEDGE225CS	8' LIVE EDGE 2.25" High-14/BX +1 roll of DBL sided tape	8' x 14pcs - 112 Linear FT/Box

FX-NC-COVERSTAR

FX-BN-COVERSTAR

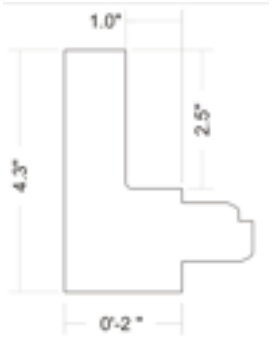

FX-SQP-COVERSTAR

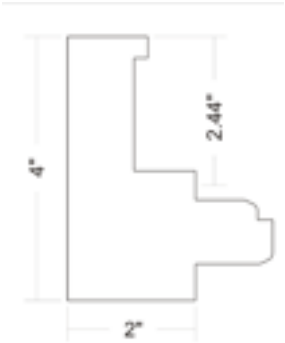

FX-LIVEEDGE225CS

COPING PROFILES FOR INTEGRA *AVAILABLE IN 112'/BOX

PART NUMBER	DESCRIPTION	EXTENDED DESCRIPTION
FX-NC-INTEGRA	8' CAPSTONE INTEGRA -14/BX	8' x 14pcs - 112 Linear FT/Box
FX-BN-INTEGRA	8' BULLNOSE INTEGRA -14/BX	8' x 14pcs - 112 Linear FT/Box
FX-SQP-INTEGRA	8' SQUARE INTEGRA -14/BX	8' x 14pcs - 112 Linear FT/Box
FX-LIVEEDGE2INTE	8' LIVE EDGE INTEGRA -14/BX + 1 roll of DBL sided tape	8' x 14pcs - 112 Linear FT/Box

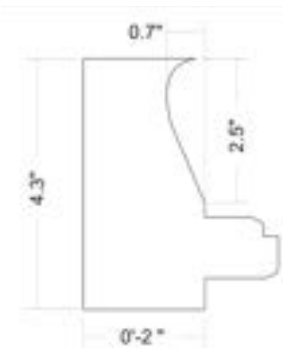

FX-NC-INTEGRA

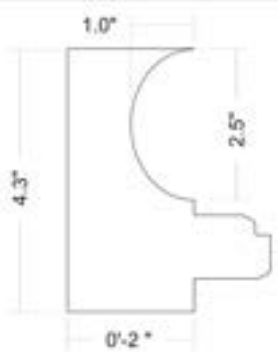

FX-BN-INTEGRA

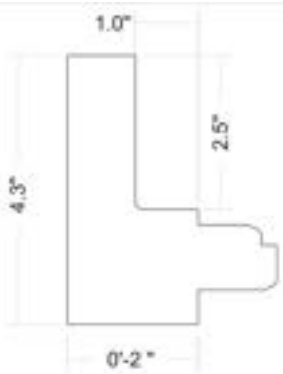

FX-SQP-INTEGRA

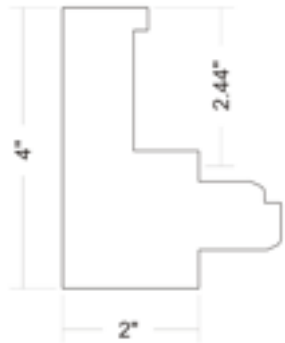

FX-LIVEEDGE2INTE

COPING PROFILES FOR RADIUS CORNER *AVAILABLE IN 4 PIECES/BOX

PART NUMBER	DESCRIPTION	EXTENDED DESCRIPTION
FX-NC-6RAD	6" RADIUS CORNER CAPSTONE VINYL - 4/BX	4 pieces/ box
FX-BN-6RAD	6" RADIUS CORNER BULLNOSE VINYL - 4/BX	4 pieces / box
FX-SQP-6RAD	6" RADIUS CORNER SQUARE VINYL - 4/BX	4 pieces / box
FX-ICC-6RAD	6" RADIUS CORNER REGULAR VINYL - 4/BX	4 pieces / box

FX-NC-6RAD

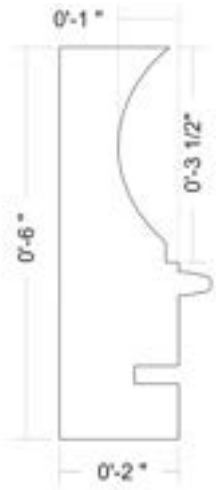

FX-BN-6RAD

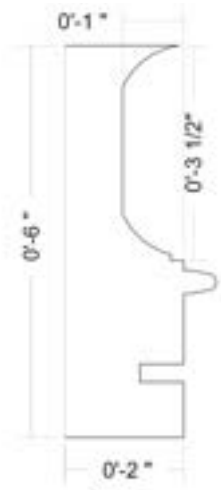

FX-SQP-6RAD

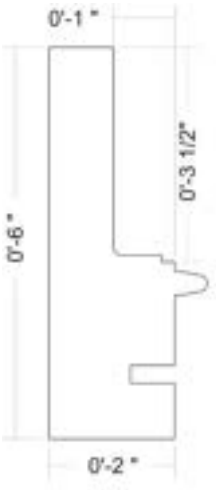

FX-ICC-6RAD

CLIPS

PART NUMBER	DESCRIPTION	EXTENDED DESCRIPTION
FX-AUTOCOVERCLIP	CANT CLIPS AUTO COVER-100/BOX	Auto Cover-Reusable
FX-CC-FG25	CANT CLIPS FG STAIRS - 25/BOX	Disposable
FX-CC-FG100	CANT CLIPS FG STAIRS - 100/BOX	Disposable
FX-CC-FG150	CANT CLIPS FG STAIRS - 150/BOX	Disposable
FX-CC	CANT CLIP VINYL LINER - 100/BOX	Reusable
FX-CC-UB	REUSABLE UNIV CLIP-BODY - 100/BX	FG/Gunite/Concrete Pools with/ without AC
FX-CC-UD	DISPOSABLE UNIV CLIP - 100/BOX	FG/Gunite/Concrete Pools with/ without AC

FX-AUTOCOVERCLIP

FX-CC-FG25
FX-CC-FG100
FX-CC-FG150

FX-CC

** Universal 2 pc. System*

FX-CC-UB

FX-CC-UD

** Universal 2 pc. System*

ACCESSORIES

PART NUMBER	DESCRIPTION	EXTENDED DESCRIPTION
FX-RG286	FILAMENT TAPE 3" X 180'	--
FX-S002	SLIDE HAMMER TOOL - CLIP REMOVER	--
FX-DBLSIDEDTAPE	DOUBLE SIDED TAPE 2" X 108'	1 roll/box
FX-EDGELINER225	REUSABLE RUBBER LINER 2.25" X 10'	2.25" High x 10 Linear FT 1/box
FX-EDGELINER3	REUSABLE RUBBER LINER 3" X 10'	3" High x 10 Linear FT 1/box

FX-S002

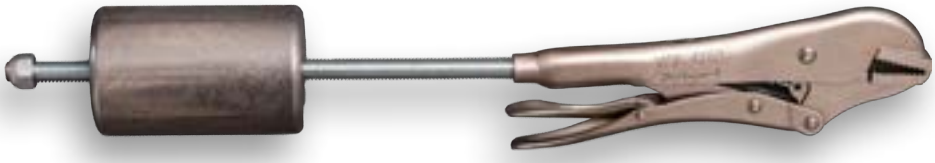

FX-DBLSIDEDTAPE

FX-RG286

FX-EDGELINER225
FX-EDGELINER3

Turner's Pool & Spa

Ian McGregor Pools

foxpool™

THE STR

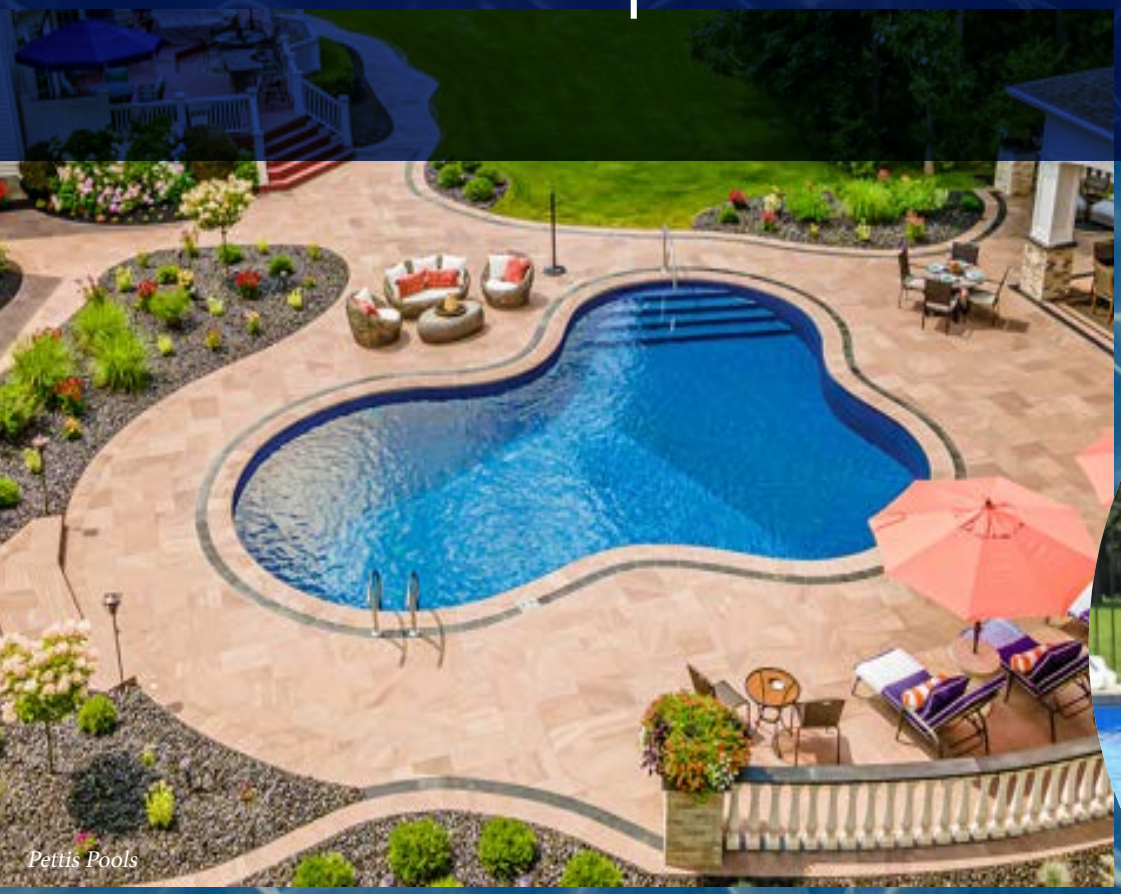

Pettis Pools

St. Lawrence Pools

ONGEST NAME IN POOLS

Fox of Central Oklahoma

foxpool™

A DIVISION OF CARDINAL SYSTEMS, INC.

Quaker Plastics

MODERN MOULDING

DOWNLOAD THE DIGITAL COPY
on our Resources Page.

WWW.FOXPOOL.COM

p: 717-801-1345

250 RT 61 SOUTH

SCHUYLKILL HAVEN, PA 17972